International Waterski & Wakeboard Federation

World Cableski Council

WORLD CABLESKI TECHNICAL RULES

Edition 2010

Version 1

Confederational Additional Rules 2010

Version 1

Contents

Cableski Technical Rules 9
Rule 1. General 9
Rule 1.1. Applicability of these rules 9
Rule 1.2. Exceptions to the rules 9
Rule 1.3. Interpretation of the rules 9
Rule 1.4. Amendments to the rules 9
Rule 1.5. Cableski World Championships Dates 9
Rule 1.6. Effectivity of the Cableski World Championships 9
Rule 1.7. Drug testing 9
Rule 1.8. Unsportsmanlike conduct 9
Rule 2. Competition entry requirements 10
Rule 2.1. Cableski World Championships entry and administration 10
Rule 2.2. Team selection 10
Rule 2.3. Non-team skiers 10
Rule 2.4. Skier eligibility 10
Rule 3. Competition events and divisions 10
Rule 3.1. Events 10
Rule 3.2. Divisions 11
Rule 3.3. Rounds 11
Rule 3.4. Schedule of events 11
Rule 3.5. Schedule changes 12
Rule 3.6. Completion 12
Rule 3.7. Starting order 12
Rule 3.8. Rating effectivity 12
Rule 3.9. Familiarization 12
Rule 4. Overall and team competition 13
Rule 4.1. Overall scoring 13
Rule 4.2. Overall calculation 13
Rule 4.3. Qualification for Overall scoring 13
Rule 4.4. Overall placement 13
Rule 4.5. Team scoring 13
Rule 5. Safety of competition and security of technical installations 13
Rule 5.1. Safety Director 13
Rule 5.2. Safety competition stoppages 14
Rule 5.3. Equipment safety 14
Rule 5.4. Unsafe skier disqualification 14
Rule 5.5. Safety boats 14
Rule 5.6. Safety boat personnel 14
Rule 5.7. On site medical facilities 14
Rule 5.8. Life jackets 15
Rule 6. Rerides 15
Rule 6.1. Reride criteria 15
Rule 6.2. Granted reride procedure 15
Rule 6.3. Request for rerides 15
Rule 7. Protests 15
Rule 7.1. Procedure 15
Rule 7.2. Reasons for protests 15
Rule 7.3. Protest submission 15
Rule 7.4. Computation errors 15
Rule 8. Installation, skis, tow lines 16
Rule 8.1. Installation 16
Rule 8.2. Skis 16
Rule 8.3. Tow lines 16
Rule 8.4. Pre-stretching of Tow lines 17
Rule 8.5. Tow lines and handles for the Trick event 17
Rule 8.6. Tow lines and handles in the Slalom and the Jump event. 17
Rule 8.7. Bibs 17
Rule 8.8. Non competition supplied equipment 17
Rule 8.9. Tow lines for the Jump event 17
Rule 8.10. Spectra ropes for Jump events 17

Rule 9. Speeds and tolerances 18
Rule 9.1. Tolerances 18
Rule 9.2. Accuracy of timing devices 18
Rule 9.3. Timing for Slalom and Jumping 18
Rule 9.4. Position of Timers 18
Rule 9.5. Timing devices for timing of Slalom and Jump 18
Rule 10. Definitions 18
Rule 10.1. Competition area 18
Rule 10.2. Definition of a fall 18
Rule 10.3. Definition of skiing position 19
Rule 10.4. Start of the skier 19
Rule 10.5. Disqualification of the skier at the start 19
Rule 10.6. Team representative 19
Rule 10.7. Time of posting 19
Rule 10.8. Usage of a run off 19
Rule 11. Jumping 19
Rule 11.1. General Jump Event Conditions 19
Rule 11.2. Refusal of the skier 20
Rule 11.3. Competition area 20
Rule 11.4. Description of the Jump Ramp 20
Rule 11.5. Jumping speeds 20
Rule 11.6. Officials stopping a jump 21
Rule 11.7. Scoring of a jump 21
Rule 11.8. The result of a skier falling 21
Rule 11.9. Officials 21
Rule 11.10. Timing 21
Rule 11.11. Safety Equipment 21
Rule 11.12. Jump distance measuring 21
Rule 11.13. Use of a video jump measurement system 21
Rule 11.14. Scoring 22
Rule 11.15. Ties 22
Rule 12. Slalom 22
Rule 12.1. General 22
Rule 12.2. Refusal of a skier 22
Rule 12.3. Competition area 23
Rule 12.4. Buoys 23
Rule 12.5. A fall in Slalom 23
Rule 12.6. Scoring buoys 23
Rule 12.7. End of the slalom run 23
Rule 12.8. A miss or „riding over“ 23
Rule 12.9. Slalom towers 23
Rule 12.10. Judging slalom 23
Rule 12.11. Timing 24
Rule 12.12. Safety equipment 24
Rule 12.13. Scoring 24
Rule 12.14. Challenging a score 24
Rule 12.15. Ties 24
Rule 13. Tricks 25
Rule 13.1. General 25
Rule 13.2. Refusal of a skier 25
Rule 13.3. Competition area 25
Rule 13.4. Speed 25
Rule 13.5. Start of trick pass timing 25
Rule 13.6. End of the trick pass 25
Rule 13.7. A fall before the pass 25
Rule 13.8. Use of a release or braking the cable 25
Rule 13.9. Officials 25
Rule 13.10. Communication with the Judges 26
Rule 13.11. Timing the trick pass 26
Rule 13.12. Judging tricks 26
Rule 13.13. Use of the video camera 26
Rule 13.14. Credit for tricks 27
Rule 13.15. Tricks at the end of the pass 27

Rule 13.16. Trick lists 27
Rule 13.17. Calculation of the trick result 27
Rule 13.18. Trick descriptions 27
Rule 13.19. Scoring 28
Rule 13.20. Ties 29
Rule 13.21. Recommended Trick event modes 29
Rule 14. Records 29
Rule 14.1. What records are recognized 29
Rule 14.2. Competitions where records may be set 29
Rule 14.3. Jump records 29
Rule 14.4. Slalom records 29
Rule 14.5. Trick records 29
Rule 14.6. Ties in an event 29
Rule 14.7. Record forms and criteria 30
Rule 14.8. Record administration 30
Rule 15. Homologation Guidelines 30
Rule 15.1. General 30
Rule 15.2. Homologation Levels 31
Rule 15.3. Surveying Equipment 32
Rule 15.4. Jump 32
Rule 15.5. Slalom 32
Rule 16. World Ranking List 32
Rule 16.1. General 32
Rule 16.2. Events 33
Rule 16.3. Categories 33
Rule 16.4. Schedule and submission process. 33
Rule 17. Cableski Officials 33
Rule 17.1. General rules for International Cableski Officials 33
Rule 17.2. Examinations of International Cableski Officials 33
Rule 17.3. Rules for 1st Class Cableski Judges 35
Rule 17.4. Rules for 2nd Class Cableski Judges 35
Rule 17.5. Rules for International Cableski Homologators 35
Rule 17.6. Rules for International Cableski Calculators 35
Rule 17.7. Rules for International Technical Officers 35
Rule 17.8. Voting of the judges 35
Rule 17.9. Placement of judges 35
Rule 17.10. Secondary positions 35
Rule 17.11. Scoring sheet availability 35
Rule 17.12. Tolerances 36
Rule 17.13. Assignment to Cableski World Championships 36
Rule 17.14. Event Judges at the Cableski World Championships 36
Rule 17.15. Rules for National Officials 36
Appendix 1. Trick values 37
Appendix 2. General Diagrams 39
Diagram 1: Measuring the height 39
Diagram 2: Calculation of AB 39
Diagram 3: Handle dimensions in Slalom and Jump 39
Diagram 4: Tow lines made with Spectra ropes 40
Appendix 4. Jump diagrams 40
Diagram 5: Jump Course 40
Diagram 6: Ramp Angle 40
Diagram 7: Ramp setting chart 41
Appendix 5. Slalom diagrams 42
Diagram 8: Slalom Course 42
Diagram 9: Scoring of buoys 43
Appendix 6. Trick diagrams 43
Diagram 10: Trick Course 43
Confederation E&A Cableski Additional Rules 44
Rule 1. General 44
Rule 1.1. Applicability of these rules 44
Rule 1.2. Amendments to the rules 44
Rule 2. Confederation E&A (European) Cableski Championships 44
Rule 2.1. Confederation E&A Cableski Championships Dates 44

Rule 2.2. Confederation E&A Cableski Championships entry 44
Rule 2.3. Team Selection 44
Rule 2.4. Qualification 44
Rule 2.5. Non-team skiers 45
Rule 2.6. Entry form and documentation 45
Rule 2.7. Officials 45
Rule 2.8. Event Judges 45
Rule 3. Confederation E&A (European) Cableski Juniors Championships 45
Rule 3.1. Confederation E&A Cableski Juniors Championships Dates 45
Rule 3.2. Categories 46
Rule 3.3. Team Selection 46
Rule 3.4. Qualification 46
Rule 3.5. Officials 46
Rule 4. Confederation E&A (European) Cableski Senior Championships 46
Rule 4.1. Confederation E&A Cableski Senior Championships Dates 46
Rule 4.2. Categories 47
Rule 4.3. Team Selection 47
Rule 4.4. Officials 47
Rule 5. European Cableski Tour (ECT) 47
Rule 5.1. General 47
Rule 5.2. Point System 47
Rule 5.3. European Cableski Tour Placement 47
Rule 5.4. Prizes 48
Rule 5.5. Entry 48
Rule 6. Medals 48
Rule 6.1. General 48
Rule 6.2. Restrictions regarding Award of Medals 49
Rule 7. International Calendar Cableski Competitions 49
Rule 7.1. General 49
Rule 7.2. Entry 49
Rule 7.3. Homologation 49
Rule 7.4. Officials 50
Rule 7.5. Requirements to the Organizer 50
Rule 7.6. Results 50
Rule 8. International Non-Calendar Cableski Competitions 50
Rule 8.1. General 50
Rule 8.2. Homologation 51
Rule 8.3. Officials 51
Rule 9. National Cableski Competitions 51
Rule 9.1. General 51
Rule 9.2. Homologation 51
Rule 9.3. Officials 51
Rule 10. Homologation 51
Rule 10.1. Dossiers 51
Rule 10.2. Normal Homologation 51
Rule 11. E&A Ranking Lists 52
Rule 11.1. General 52
Rule 11.2. Events 52
Rule 11.3. Categories 52
Rule 12. Performance Booklets 52
Rule 12.1. Purpose 52
Rule 12.2. General 52
Rule 12.3. Validity 52
Rule 13. Records 53
Rule 13.1. General 53
Rule 13.2. Categories 53
Rule 14. Rules for Cableski Officials 53
Rule 14.1. Officials Cards 53
Rule 14.2. Participation in Competitions 53
Rule 15. Rules for International Cableski Homologators 54
Rule 15.1. Homologation Dossier 54
Rule 16. Rules for National Officials 54
Rule 16.1. Responsibility 54

Rule 16.2. Rights 54
Rule 16.3. Functions 54
Rule 16.4. Appointment to Panels 54
Rule 16.5. Examinations 54
Rule 16.6. List of National Cableski Officials 54
Rule 17. Officials Seminar for Judges, Calculators, Technical Officers and Homologators 54
Rule 17.1. Responsibility and Purpose 54
Rule 17.2. Attendance 55
Rule 17.3. Date and Venue 55
Rule 17.4. Costs 55
Rule 18. Harry de Laat Memorial Trophy 55
Rule 18.1. Purpose 55
Rule 18.2. Consignee 55
Rule 18.3. Presentation 55
Rule 18.4. Duration 55
Rule 19. Homologator's Checklist 56

These rules supersede all previous editions and shall remain in effect until an amended edition of the rules is published. Updates, revisions and corrections for these rules can be found on the Cableski Council Homepage at http://www.cableski.org
Contact: Juergen.Pitz@cableski.de

These rules do not contain a list of changes from previous rules. For a list of changes please see at http://www.cableski.org

Published 11.04.2010.

Cableski Technical Rules

These rules have been drafted in English. In the case of a translation and conflicting interpretation only the English text shall be considered authentic.

Rule 1. General

Rule 1.1. Applicability of these rules

The rules set forth here govern cableski competitions sanctioned by the International Waterski and Wakeboard Federation (IWWF). With the exception of entry requirements and other administrative matters, it is recommended that Confederations and Federations follow these rules as closely as possible.
Whenever the masculine is used, the same shall be construed as meaning the feminine where the context so requires.

Rule 1.2. Exceptions to the rules

Where compliance with the rules is not feasible, the Chief Judge shall, with the approval of a majority of the Appointed Judges, make the necessary changes, inform each skier by posting and send a report to the IWWF Cableski Council. Where the rules are definite and feasible, a vote of the judges to decide whether to enforce any changes is prohibited.

Rule 1.3. Interpretation of the rules

Questions of interpretation of the rules shall be referred to the IWWF Cableski Council when possible. Any interpretation made by the IWWF Cableski Council as a whole shall be considered final. Otherwise the interpretation shall be made by the majority vote of the Appointed Judges, and the Chief Judge shall make a report to the IWWF Cableski Council concerning the question.

Rule 1.4. Amendments to the rules

Amendments must be approved by a two-thirds (2/3) majority of the members of the IWWF Cableski Council. The rules may be amended at any time by the IWWF Cableski Council. The amended rules shall become effective 60 days after they are published.
Until such time as a new edition of the rules is published, the current rules, as amended by the IWWF Cableski Council, remain in effect. A unanimous decision of the members of the IWWF Cableski Council is immediately applicable.
All new tricks submitted must include a video showing the trick. If there are new tricks accepted by the IWWF Tournament Council, they can be accepted by the IWWF Cableski Council.

Rule 1.5. Cableski World Championships Dates

The Cableski World Championships shall be held biennially in even numbered years.

Rule 1.6. Effectivity of the Cableski World Championships

The inability of a country to attend the Cableski World Championships for one reason or another (including political reasons) does not require that the entire competition be cancelled or postponed or that the titles are any less world titles.

Rule 1.7. Drug testing

All competitors must agree to be subject to doping control. Specific policies and procedures regarding doping control shall under the control of the Medical Commission of the IWWF and according to the rules of the WADA.

Rule 1.8. Unsportsmanlike conduct

Any skier or his representative, or official whose conduct is deemed unsportsmanlike or whose conduct may cause discredit to the IWWF, either on or off the competition site, before, during or after the competition, may be disqualified from all or part of the competition including completed events, by a two-thirds (2/3) majority vote of the Appointed Judges and/or be subject to a fine to be determined by the IWWF Executive Board. The affected individual will be given an opportunity to

present his case before a disqualification decision is made. In the case of a finding of unsportsmanlike conduct, a report must be submitted by the Chief Judge to the Chairman of the IWWF Cableski Council. If the IWWF Executive Board assesses a fine, it will be paid by the skier's federation.

Rule 2. Competition entry requirements

Rule 2.1. Cableski World Championships entry and administration

Each Federation that is affiliated to the IWWF shall have the right to select a team of skiers to represent their Federation in the Cableski World Championships.
Each Federation shall certify to the Chairman of the IWWF Cableski Council and to the organizing committee, not later than 60 days before the scheduled start of the familiarization of the Cableski World Championships, it's intent to compete. Any Federation not meeting this requirement will not be allowed to compete until they pay a fine of 200 Swiss Francs to the IWWF.
Any Federation shall certify to the Chairman of the IWWF Cableski Council, the Chairman of the Confederation Cableski Council, and the organizing committee, not later than 10 days before the scheduled start of familiarization of the Cableski World Championships, the names of the members of its team, the events each will enter, the ratings of each skier, as well as the names of the official reserves. Any Federation not meeting this requirements will not be allowed to compete until the Federation pays a fine of 10 Swiss Francs per skier per day after the 10-day deadline to the IWWF for each skier not officially entered. If the official entry forms are not received prior to the 24 hours before the start of official familiarization, the Federation shall not be entitled to official familiarization and it's skiers shall be placed in the lowest seeded group without reference to their performances.

Rule 2.2. Team selection

Each team shall consist of a maximum of 6 skiers, with the further limitation that no team may have more than 4 men or 4 women.
Each Federation shall furthermore have the right to nominate two reserve skiers to its team, to replace any injured skier, provided the maximum number of 4 men or 4 women is not exceeded.

Rule 2.3. Non-team skiers

Skiers not selected for their national team may qualify to compete in the Cableski World Championships as individuals in their event if they meet one or more of the following criteria:

a) World Cableski Record Holder. The Skier must have performed the record at least 45 days before the first day of familiarization of the Cableski World Championships and have his performance ratified by the IWWF Cableski Council at least 15 days before the first day of familiarization of the Cableski World Championships.
b) Reigning World Cableski Champion in that event (Slalom, Tricks or/and Jump) in which they defend their title.
c) Ranked in one IWWF World Cableski Ranking List of the last 2 years in the top 10% men or women in any event excluding overall. The numbers will be rounded to the nearest full digit.
d) Wild card nominees. The hosting country can select up to two individuals as wild card entries.

All skiers qualified as individuals must be entered by their federation.

Rule 2.4. Skier eligibility

A Federation may select its team in any manner it desires; however each team member must be a citizen or applying for citizenship of the country the Federation represents. In case of doubt as to the nationality of a competitor, the Judges normally will refer to his passport. If the competitor does not have a passport from the country for which he is skiing, he must prove residence in that country for at least the last 5 years and membership of that Federation. Each Federation shall certify to the Judges that all members of its team meet these qualifications.

Rule 3. Competition events and divisions

Rule 3.1. Events

The events in a competition are Jumping, Slalom and Tricks, with a winner and succeeding places determined in each event. A winner and succeeding places shall also be determined for the Overall as described in Rule 4.1 and in case of a team scoring for the national teams as described in Rule

4.5.

Rule 3.2. Divisions

Competition in each event shall be separated into a Men's and a Women's division.

Division	Age	Max. Slalom Speed	Max. Jump Speed	Ramp Heights
Open	No limitation	Men: 58 Women: 55	Men: 57 Women: 54	Men: 1.50 or 1.65 or 1.80 Women: 1.50 or 1.65
Juniors under 15	Under 15	Men: 58. Women: 55	Men: 51 Women: 48	Men: 1.50 Women: 1.50
Juniors under 19	Under 19	Men: 58 Women: 55	Men: 54 Women: 51	Men: 1.50 or 1.65 Women: 1.50
Seniors 1	35 years or over	Men: 55 Women: 55	Men: 57 Women: 54	Men: 1.50 or 1.65 Women: 1.50
Seniors 2	45 years or over	Men: 55 Women: 55	Men: 54 Women: 51	Men: 1.50 Women: 1.50
Seniors 3	55 years or over	Men: 55 Women: 55	Men: 51 Women: 48	Men: 1.50 Women: 1.50

All ages refer to the age of the skier on the 31st December of the previous year.
For the Cableski World Championships all skiers will be considered as participating in the Open division.

Rule 3.3. Rounds

Each event shall consist of two rounds: a preliminary round and a final round.
A skier must score (more than 0) in the preliminary round to qualify for the final.
The number of skiers qualified to ski in the final of an event shall be determined as shown in the following table:

Number of Skiers (Team and Non-Team) which have participated in the Preliminary round	Number of Skiers (Team and Non-Team) in Finals
1 – 5	All
6 – 10	First 5
11 – 14	First 6
15 – 19	First 8
20 – 24	First 10
25 or more	First 12

If there is a tie for the last place in the finals , there will be a run-off between the tied skiers.

Rule 3.4. Schedule of events

Not later than 2 months before the start of the competition, the Competition Chairman shall send to each affiliated Federation, a schedule showing the days on which official familiarization and the days on which the competition events will be held. The schedule of events for both preliminary and final round shall be drawn up by the Chief Judge, the Chairman on the IWWF Cableski Council and the Competition Chairman and posted prior to the start of official familiarization. This list shall include starting times for each day. A schedule of starting times for individual events, if shown, shall be for guidance of the skiers only and any deviation shall not constitute a change. It is recommended that jumping be scheduled as the last event in both the preliminary and final rounds.

Rule 3.5. Schedule changes

Changes in the schedule during the competition shall be made only for weather, water conditions, safety, or a similar reason. A majority of the Appointed Judges must approve the change and all affected skiers shall be notified by posting. Although schedule changes are to be discouraged, the judges should not hesitate to make adjustments required for safety.

Rule 3.6. Completion

Once the competition has started, the judges do not have the authority to cancel any event, except in the case of a definite safety hazard. In case a final round of an event for any division can not be completed, the results of the preliminary round of that event and that division will be used to determine the placements for that event and division.

Rule 3.7. Starting order

The day before the start of a preliminary round the entry list shall be closed and thereafter the order of skiers made by random draw and posted. No change in this order is allowed except that a team representative may:

- Withdraw a skier from competition.
- Replace, with the authority of the Chief Judge and before the start of the first event, that is to say before the first skier taking part in the first event has started, an injured skier by a qualified official reserve from the same team. The substitute skier shall start first in the seed in which he is qualified unless the draw has not yet been completed.[1]

The competitors will be drawn in the following manner: List of competitors will be drawn up in order of performance in each event for both men and women. Skiers will then be divided into seeded groups of a size decided by the Chief Judge and each group will then be drawn separately (c.f. however Rule 11.1 for jumping order in the Jump event).
The Event Judges may reverse or change the starting order of these groups according to the prevailing conditions.
The order of the skiers qualified for the final round in any event shall be the reverse of their order of placement in the preliminary round of that event.
The order of skiers tied in placement shall be settled by random draw.
Performances will be taken from the previous years Cableski Standing List or from the skier's Performance booklet if available.

Rule 3.8. Rating effectivity

Performance booklets shall be certified under the responsibility of the Chairman of the Cableski Council of the Confederation or his designated representative, based on performance in competitions sanctioned by the IWWF, a Confederation or an Affiliated Federation. Performances recorded in cableski competitions, in the current calendar year and the previous calendar year are valid for this purpose. Performance booklets so certified shall be accepted by the Judges without further examination.

Rule 3.9. Familiarization

The skiers will be permitted to familiarize themselves with the installation and jump ramp under the authority and the responsibility of the Chief Judge. Each skier participating in familiarization shall be allotted either a set number of rounds and / or a certain amount of time at the discretion of the Chief Judge based on the principle that every skier shall receive an equal opportunity for familiarization.
The schedule for familiarization shall be decided by the Chief Judge. The Chief Judge shall have the discretion to change the start time of an individual's or team's familiarization based on extraordinary circumstances.
As guidance for Organizers: if practice is to be offered at a cost (unofficial familiarization), then a deadline date should be set by which time all requests must be submitted. After this date practice times should be allocated to ensure all countries have an equal opportunity according to their request.

[1]Alterations due to ramp height changes or shared equipment can be accepted until the end of the official familiarization.

Rule 4. Overall and team competition

Rule 4.1. Overall scoring

Each skier shall be awarded in each event a certain number of overall points according to the computation of his better score in either the preliminary or final round.

Rule 4.2. Overall calculation

For Tricks:
Overall points = (Trick score skier*1000) / Best Trick score of division.

For Slalom:
Overall points = ((Slalom score skier + extra buoys)*1000) / (Best Slalom score of division + extra buoys).
The extra buoys are counted from the minimum startspeed for each division. For each higher start speed or rope length an additional 6 buoys is added.
The minimum startspeeds from where extra buoys are given for the divisions are:
Junior under 15 Girls: 37 km/h
Junior under 15 Boys, Junior under 19 Girls: 40 km/h
Junior under 19 Boys, Open Women, Seniors 1 Women: 43 km/h
Open Men, Seniors 1 Men: 46 km/h

For a skier to receive credit for these extra buoys, he must have successfully completed his first pass.

For Jump:
Overall points = ((Jump score skier – Deduction)*1000) / (Best Jump score of division – Deduction)
Deduction:
Junior under 15 Girls, Junior under 15 Boys: 0.
Junior under 19 Girls, Senior Women: 5.
Open Women, Junior under 19 Boys, Senior Men: 10.
Open Men: 15.
A skier's overall score in Jump shall not be reduced below zero.

Rule 4.3. Qualification for Overall scoring

To be considered for Overall standings, a skier must have scored in all three events, even if the result is 0. To receive points he must have reached the competition area of the event. In case a skier falls before entering the competition area or his refusal to enter the competition area is not accepted by the judges, this will be counted as a start but he will not receive overall points for this event.

Rule 4.4. Overall placement

Places in the Overall Championship shall be determined by adding each skier’s Overall points in all three events. If a majority of the Appointed Judges decide that it is physically impossible to complete the final round of one or more events (jumping, slalom or tricks) of any division, only the overall points from the preliminary round of all the events of that division will be used.

Rule 4.5. Team scoring

For calculating a team overall score, the best three Overall scores, men or women, in each event in the preliminary round, shall be added together. The performance by a skier who is entered as an individual shall not be taken into consideration in the calculation of the team score.

Rule 5. Safety of competition and security of technical installations

Rule 5.1. Safety Director

At least 2 months before the competition, the organizing Confederation Cableski Council shall appoint a Safety Director, who will appoint such assistants as appear necessary, and inform the

President of the IWWF and the Chairman of the IWWF Cableski Council. The Safety Director shall be responsible for the safe conditions of all equipment, facilities and operation of the competition; but this shall not prevent him from delegating specific responsibilities to his assistants as approved by the Chief Judge. He shall have the authority to take whatever action is necessary including stopping the competition whenever he observes a condition he believes unsafe. The Chief Judge may overrule any contemplated action or decision of the Safety Director on his own responsibility.

Rule 5.2. Safety competition stoppages

Should the Safety Director stop a competition for any reason, disqualification time periods shall not run as long as the competition is stopped.
The Safety Director should remain near the competition area as much as possible.

Rule 5.3. Equipment safety

The Safety Director shall determine whether equipment to be used by a skier meets safety specifications.

Rule 5.4. Unsafe skier disqualification

No skier shall be allowed to compete or to continue to compete if, in the opinion of the Safety Director and a majority of the Event Judges, his competing would be a danger to himself or other skiers in the competition. During the competition, the Safety Director may, at any time, request the Chief Judge to halt the competition for a poll of the Event Judges in regard to a skier's actions or conditions. Whenever practical, the advice of the medical officer should be obtained.

Rule 5.5. Safety boats

It is recommended to use one safety boat positioned in the inside of the cable during all events and familiarization times, facing the competition area or the skier's anticipated point of landing in jumping. In jumping an additional swimmer is recommended. The motor of the rescue boat shall be running during the competition and the familiarization.

Rule 5.6. Safety boat personnel

The safety boat will be manned by:

a) An experienced driver who is familiar with the conduct of all competition events and familiarization.
b) A swimmer, also familiar with all competition events and familiarization and ideally being fully trained in First Aid, Emergency Resuscitation and Water Rescue Techniques (as outlined in the IWWF Safety Manual).

The swimmer will wear a life jacket at all times and, in the event of a serious fall, will jump into the water to assist the skier. If the injured skier is unable to climb into the safety boat with little or not assistance, the skier will be floated to the shore and lifted from the water on a suitable board or stretcher. Under no circumstances will an injured skier be lifted passively over the side of the safety boat.

IT IS EMPHASIED THAT, IN INTERNATIONAL COMPETITION, LANGUAGE DIFFICULTIES MAY INTERFERE WITH COMMUNICATION; AND FOR THIS REASON, THE SWIMMER MUST GET INTO THE WATER TO ASSIST THE INJURED SKIER.

Rule 5.7. On site medical facilities

The Safety Director will appoint a Competition Medical Officer who will undertake to provide the following services:

a) A suitably qualified medical officer will be in attendance during all familiarization and competition events.
b) A suitably equipped medical station prepared to deal with any sort of medical emergency will be conveniently located at the competition site.
c) Suitable transportation facilities that will allow an injured skier to be moved safely and promptly to the best local medical unit for further care.
d) A working relationship will be established between the local hospital or medical unit and the Competition Medical Officer, such that casualties will get prompt and expert treatment when required.

Rule 5.8. Life jackets

A life jacket must meet the following specifications:

a) It must be smooth and soft and free from attachments or material likely to cause injury in a fall.
b) It must be constructed and fastened in such a manner that it is unlikely to be torn loose or damaged so as to render it useless in a hard fall.
c) It must float the skier.
d) It must not be an inflatable device.
e) It must be constructed so as to provide adequate protection from impact damage to the ribs and internal organs. A normal wet suit shall not be considered adequate protection in this respect.

Rule 6. Rerides

Rule 6.1. Reride criteria

When unfair conditions or a malfunction of the equipment supplied by the organisers occurs, which, in the opinion of a majority of the Event Judges adversely affect a skier, he shall be granted the option of a reride only on the passes affected. When the skier receives an unfair advantage, the reride is mandatory. When taken, the reride is scored except in the specific cases in Jumping and Slalom (see Rule 11.10 and Rule 12.11).

Rule 6.2. Granted reride procedure

Rerides must be taken as soon as technically possible after they are granted (c.f. Rule 11.10 for Jump rerides and Rule 12.11 for Slalom rerides). If consecutive rerides are granted, the skier has the option for a 5 minute rest before continuing. If the skier elects to take a 5 minute rest, the next skiers in order shall ski, and the reride shall be taken at the conclusion at the skier‘s run during which the 5 minute rest period expires.

Rule 6.3. Request for rerides

Request for rerides may be initiated by an Event Judge or the Technical Officer before the next skier starts or may be initiated, as soon as possible, by the skier or his team representative and shall be decided as soon as practicable thereafter. If, in the opinion of the Event Judges, the request was not initiated as soon as possible after the skier skied, the request shall be denied.

Rule 7. Protests

Rule 7.1. Procedure

Protests shall be made to the Chief Judge only by a team representative and shall be considered by the Event Judges. Protests must be in writing, must state the reason(s) for the protest and must be filed as soon as possible, but not later than 30 minutes after the results of the event are announced and the Judges’ scoring sheets are available for inspection.

Rule 7.2. Reasons for protests

Protests shall be allowed only for failure of the Organisers or Officials to comply with these rules and only if this non-compliance with the rules has an adverse effect on a skier. No protest shall ever be permitted on a judgement decision by the Judges.

Rule 7.3. Protest submission

Protests must be accompanied by the approximate equivalent in local currency of 50 Swiss Francs. This amount will be refunded if the protest is considered reasonable by the Event Judges.

Rule 7.4. Computation errors

A correction of an error in the computation of scores shall not be considered a protest and the correction shall be made on the approval of the Chief Judge and Chief Calculator if requested within 2 hours after the results of the event are announced and the Judges’ scoring sheets are available for inspection.

Rule 8. Installation, skis, tow lines

Rule 8.1. Installation

The installation shall be a 10 mm cable with a competition area between two deflection pulleys with a minimum distance of 300 m for the Slalom and the Jump competition areas, shall turn counter clockwise and shall have the power necessary to attain and maintain the required speeds.
At least half of the carriers should be prepared for the competition. Should a carrier disconnect twice, the tension should be re-tensioned immediately or another carrier should be tensioned for competition conditions. Either the even or odd carriers should be trimmed.
From the organising committee at least 1 person should be present who knows the installation and is responsible for it. The installation must be in optimal technical condition, in order to guarantee a smooth running of the competition.
The installation must have a speedometer calibrated between 25 km/h and 60 km/h.

Rule 8.2. Skis

The maximum ski width shall not exceed 30 percent of the overall length.
Any type of fixed foot bindings may be used.
Any type of fixed fins may be used.
Devices affixed to the ski intended to control or adjust the skiing characteristics of the ski are allowed as long as they are fixed in that they do not move or change during actual skiing.
No other devices are permitted.
Skis must be safe. There must be no unnecessary sharp or abrasive (to the touch) attachments to the ski which could, in the opinion of the Safety Director, inflict injury to the skier should he come in contact with the ski in a fall.

Rule 8.3. Tow lines

This rules mention two types of lengths of towlines; the effective and the horizontal length. The effective length is calculated, based on the given horizontal length and the measured average height of the cable.
Calculation of the average height of the main running cable „AB“ = (Height of the entry wheel „H1“ + height of the main running cable in the middle „H2“ + height of the exit wheel „H3“) : 3.

$$AB = \frac{H1 + H2 + H3}{3}$$

When „H2“ is measured with a loading of 70 kg on the cable (see Diagram 1).

Diagram 2 shows the relations between the horizontal length of a line, the effective length and the height of the cable. The distance AB is the height of the cable. The corner ABC is a 90^0 angle. Point A is the end of the line that is fastened to the main running cable. Point C is the handle. The distance AC is the effective length of the line. The distance BC is the horizontal length of the line.
When the height AB of the cable and the horizontal length BC is given, the effective length shall be calculated with the help of the next formula:

$$AC = \sqrt{AB^2 + BC^2}$$

All line lengths given in this rules are the horizontal lengths.
The organizer shall furnish single-handle tow lines as in (d) below, made of 6 mm, single braided, monofilament line of plastic material, with the handles and line meeting the following specifications:
a) Number of strands = 12.
Number of yarns each strand = 60.
Diameter at 5,5 kg load = 6,3 mm.
Weight per meter = 16,0 g to 23,0 g.
Breaking load, minimum = 590 kg.
Elongation at 115 kg tensile load = 3,2 % maximum.
All measurements of towlines shall be made at 20 kg tension and shall be made between the centre line of handle at the point furthest from the end of the trimball.
b) The handle shall be made of 2,50 to 2,80 cm outside diameter material with no sharp edges or projections, with a non-slip surface or coating. The attaching ropes must in all cases go through the

handle and must be attached so there is no possibility of movement between the rope and the handle when in use. The minimum certified breaking load of the handle shall be 270 kg applied at the rate of 290 kg for a minute at two load points 9 cm apart at the centre of the handle with the ends supported at the rope holes.
c) Tow lines should be prepared as follows: 6 lines of 18,25 m, 5 of 16,00 m and 14,25 m and 2 of the shorter lengths. A tolerance of ± 15 cm on the distance from the end of the trimball to the middle of the handle is allowed for ropes till 14,25 m. From the 13,0 m rope on the tolerance is reduced to ± 7,5 cm.
d) The tow rope shall consist of the following parts:
- the handle with a length of 1,50 m (only for Slalom and Jump)
- the tow rope
- the trimball and cable
e) Dimensions shall be as in Diagram 2.

Rule 8.4. Pre-stretching of Tow lines

All ropes should be pre-stretched to insure tightness of the splices before measurement.

Rule 8.5. Tow lines and handles for the Trick event

The towlines in the trick event are 14,50 m with a loop at the end (that is a 16 m line without the handle portion). The skier must furnish his own handle for the trick event of any length, dimension or material.

Rule 8.6. Tow lines and handles in the Slalom and the Jump event.

Skiers in Slalom and Jump are required to use competition supplied tow lines and handles. Organizers shall furnish a minimum of 6 identical handles as described in Rule 8.3.

Rule 8.7. Bibs

It may be required that skiers must wear identifying bibs while skiing. The bibs must be of a design approved by the Chairman of the IWWF Cableski Council for the Cableski World Championships or by the Chief Judge and the Safety Officer for any other competition. The central feature of the bib will be an identifying number on both the front and back of the bib. The individual digits of the number must be a minimum of 15 cm in height and be clearly visible from a distance. The design must allow for use of an arm sling in jumping and also be snug so that it does not interfere with the free movement required in tricks. The bibs will be given to each team captain before the competition for distribution to his team. Spare bibs, with no numbers, should be available at the starting jetty in case a skier's bib is damaged and unusable. Skiers must wear the bib with the number assigned to them only.
In case a skier started without wearing his bib, he will be disqualified for the reminder of this event and shall receive no points for this run.

Rule 8.8. Non competition supplied equipment

The use of such equipment is at the skier's own risk, and any failure of such equipment shall not be considered as the basis for any requests for reride.

Rule 8.9. Tow lines for the Jump event

The horizontal length for the towlines in the jump event is 18,25 m.

Rule 8.10. Spectra ropes for Jump events

On an experimental basis the use of Spectra ropes is allowed for Jump events. For the time being these events shall be limited to non-titled competitions or special Jump competitions. If the organiser decides to use Spectra ropes, this shall be announced in the invitation. A minimum of 5 lines shall prepared and shall be used by all skiers. The complete rope shall consist of a 1,25m piece made of standard rope as described in Rule 8.3, which shall work as designated breaking point, a part made of Spectra rope, and the handle (see Diagram 4).

Rule 9. Speeds and tolerances

Rule 9.1. Tolerances

All average speeds in Slalom, Tricks and Jumping shall be accurate to ± 0,5 km/h. For a speed to be considered accurate in any event, the *average* speeds recorded in the course, as noted by the official, must be within the tolerances allowed. The speed may vary a maximum of ± 0,5 km/h for a distance before entering the competition area and has to be maintained until the skier is out of the competition area, except for Rule 11.5.

Rule 9.2. Accuracy of timing devices

Any timing device used in a competition must be checked for accuracy by the Homologator or the Chief Judge.

Rule 9.3. Timing for Slalom and Jumping

The timing for Slalom shall start when the skier's carrier passes the last deflection pulley before the slalom course and ends when the skier's carrier passes the first deflection pulley after the slalom course.
Timing for Jumping will be taken between the two carriers immediately following the skier's carrier. The timing starts when the first carrier after the skier's carrier passes the deflection pulley before the ramp and ends when the second carrier after the skier's carrier passes that deflection pulley.
In case of a fall of the skier, the timing is stopped at the moment of the fall.

Rule 9.4. Position of Timers

There shall be two officials for timing in Slalom and Jumping. The Official Timer shall be located at the most appropriate position. The Backup Timer may be located on one of the judges towers and shall govern in the event that the Official Timer fails to get an accurate time for some reason. The timer shall observe and record all timings, and deviations, on each pass, and shall inform the responsible official about any deviations that exceed the tolerances in Rule 9.1.

Rule 9.5. Timing devices for timing of Slalom and Jump

The timing devices for timing for Slalom and Jump must determine the average speed in the time between the starting and stopping the device measuring. The backup timing device may be a stopwatch.

Rule 10. Definitions

Rule 10.1. Competition area

The competition area is defined between the deflection pulleys before and after the Trick, Slalom and Jump course. The competition layout and dimensions are shown in Diagram 6, Diagram 9, and Diagram 11. No buoys or markers other than those indicated and buoys for video jump measurement systems are permitted within the competition area except to mark safety hazards, landing or starting areas or turning buoys. Any such buoys shall be distinguishable from competition buoys and shall be pointed out to the skiers at the start of the competition.
A skier enters and leaves the competition area when his carrier goes around the pulley which marks the beginning or the end of the competition area.
Any changes in the layout between the practice and the competition (moving of buoys, removal of buoys) shall be notified to the skiers, if possible before the practice.

Rule 10.2. Definition of a fall

A fall in any event is defined as accomplished at the moment any one of the following occurs:
a) The skier loses possession of the towline.
b) The skier does not have at least one ski on one foot.
c) The weight of the skier is not supported by his ski or skis; and in addition, the skier is ultimately unable to regain skiing position. In Slalom and in Jump the skier may not recover by making a tumble turn. A recovery by making a tumble turn BEFORE the course shall not be considered as

a fall.

Rule 10.3. Definition of skiing position

Skiing position is defined as that position in which all of the following exists:
a) The skier has possession of the towline.
b) The skier is riding forward or backward with a ski or skis on his feet.
c) The weight of the skier is entirely supported by his ski or skis on the water, or the skier is ultimately able to regain good balance.

Rule 10.4. Start of the skier

The skier is considered to have started when the marked carrier of the main running-cable connects with the ski line.

Rule 10.5. Disqualification of the skier at the start

Each skier who is not ready to start when the marked carrier connects with the ski line shall be disqualified for the remainder of that round in that event.
In the case where a skier has been disqualified or has been scratched the next skier shall start as soon as technically possible.
If necessary there shall always be a skier ready to ski in case an unforeseen empty run occurs. This forerunner will then ski one round before the next competitor starts.[2]
The skiers will make every effort to return to the starting jetty without undue delay when they are still skiing in the same event.

Rule 10.6. Team representative

Each Federation shall select a team representative whose name shall be given to the Chief Judge before familiarization starts. The team representative shall represent all skiers from his federation. An alternative team representative may also be named.

Rule 10.7. Time of posting

The time of posting is when the signed results are posted.

Rule 10.8. Usage of a run off

The result performed in a run off will only be used for determination of final placement for the event. This means that this result will not be used for overall score, record setting, ranking list performances and performance booklets entries.

Rule 11. Jumping

Rule 11.1. General Jump Event Conditions

Each skier shall be entitled to three registered jumps or passes or falls in the preliminary round and three registered jumps or passes or falls in the final round.
The jumps must be done singly. The skier is not allowed to take the jumps consecutively, unless there is only one skier on that jump height.
For the allowed ramp heights for each division and age category see Rule 3.2. Skiers of one division and age category jumping at the same ramp height will be drawn together and the skiers jumping on the lowest ramp height will be jumping first.
It is recommended to group skiers of different divisions and age categories jumping on the same ramp height together.
If a skier chooses to change his ramp height for the final round, he should announce this to the Chief Calculator within two hours after the preliminary round jump results are posted.
Only the length of the jump will be considered no matter what ramp height is chosen by the skier.

---

[2]Using a forerunner should be as little as possible, e.g. an exaggerated use of the forerunner is not encouraged by the Cableski Council. Cases where a forerunner can be used:
- Slalom: Before the first skier and in case of an unforeseen empty run. In case just one skier is left to ski (all others are already out of the competition) the usage of a forerunner is not encouraged.
- Tricks: Before the first skier.
- Jump: Before the first skier, to check the measurement system.

A fall shall not eliminate the skier from the following pass provided that fall is a result of a jump.

Rule 11.2. Refusal of the skier

A skier may refuse to enter the jump course on each jump by raising one arm in the air. He shall not be penalized for so doing providing this refusal was for a reason judged acceptable by the Event Judges. The skier must be ready to ski immediately after the decision of the Event Judges. Should the skier not be ready or should the reason be judged not acceptable by the Event Judges, he looses the right for this jump and this jump will not be considered as a registered jump.
A jumper shall receive no further jumps in a round, if on a definite cut to the ramp, the jumper elects to pass between the ramp and the main running cable, whether or not he retains the tow rope.

Rule 11.3. Competition area

The competition area begins at the last deflection pulley before the ramp and finishes at the next deflection pulley after the ramp (see Diagram 6).
The ramp must be situated between 180 m and 190 m after the first deflection pulley of the competition area. There shall be a buoy at 140 m and one at 160 m before the ramp. These buoys will act as guide buoys for the skiers, to start their cut.
If the jump course and the slalom course are incorporated into each other, the 140 m and the 160 m buoys shall be in a different colour than the slalom buoys.

Rule 11.4. Description of the Jump Ramp

The jump ramp shall be an inclined plane with an apron on the right-hand side. The ramp shall meet the following specifications:

a) Width: 3,70 m to 4,30 m at all points. 4,20 m to 4,25 m is recommended.
b) Length out of water: 6,40 m to 6,80 m at all points.
c) Length under water: 50 cm minimum.
d) Ratio of ramp height at take off edge to ramp length out of water: 0,235 ± 0,003 (1.50 m) or 0,255 ± 0,003 (1.65 m) or 0,271 ± 0,003 (1.80 m).
e) Ratios are to be computed on both sides of the ramp, and the ramp height at the take off edge at the two corners may differ by no more than 2,5 cm (see Diagram 8).
f) The surface must be flat with a maximum deviation of 2,5 cm from plane.
   This will be verified by two measurements:

- Place a taut string from the lower right corner (jump course side) of the surface of the upper left corner of the surface and measure the maximum distance between the ramp surface and the string.
- Place a taut string from the bottom center of the surface to the top center of the surface and measure the maximum distance between the ramp surface and the string.
  These distances are to be recorded and must not exceed 2,5 cm as stated above.

g) An apron shall extend the full length of the ramp on the right-hand side and be at least 30 cm under water when the ramp is set for the 1,80 m height. Ramp aprons shall be of different colour or shade from the ramp surface so as to provide a satisfactory contrast between apron, water and ramp surface. The apron shall have a minimum angle of 40° and a maximum of 50°. The recommended angle is 45°.
h) 6,40 m and 6,80 m length markings, clearly identified, shall be placed on the ramp surface so that they are readily visible. A line visible from shore shall be painted at the center of and just below the take off edge for meter sighting purposes.
i) The jumping ramp must be securely anchored in place so that the center take off edge will not vary more than the sighted width of the cross hair on both meters after coming to static rest. „Static rest“ is the position assumed by the ramp in ambient water not affected by skier's wakes or backwash.
j) All measurements of the ramp shall be made under competition conditions, including the weight of watering equipment and not including the weight of a skier.
k) It is recommended that all fibreglass jump surfaces are of a red-orange colour. Wax surfaces on wood will remain their natural colour.

Rule 11.5. Jumping speeds

The speeds for the jumping event shall be at the option of the skier up to following maximum speed of the skiers division and age category as per Rule 3.2.
The maximum jump speed will be lowered only by increments of 3 km/h.
Following jump speeds will be used: 39 km/h, 42 km/h, 45 km/h, 48 km/h, 51 km/h, 54 km/h , 57

km/h.
The skier can elect his startspeed, provided that it is not more than 15 km/h lower than the elected jumpspeed. Immediately after the carrier has passed the last deflection pulley before the ramp, the speed will be brought from the startspeed to the jumpspeed. Decelerations of the cable from jumpspeed to startspeed starts immediately after the skier hits the water after the jump. The rate of deceleration will be the same as the rate of acceleration from startspeed to jumpspeed and should be as fast as possible.
N.B.: The startspeed is the speed the cable has to have before the skier enters the competition area, means before the carrier passes the last deflection pulley before the ramp. The skier can leave the starting jetty with a lower speed.

Rule 11.6. Officials stopping a jump

A jump shall not be registered should the Judges decide that there is a hazard because of dangerous water conditions or other reasons. A judge shall then inform the Technical Official to lower the speed.

Rule 11.7. Scoring of a jump

A jump shall be scored when the skier passes over the ramp, lands and skies until the carrier passes the pulley after the ramp without falling.
The cable can be stopped after the carrier passes the pulley to avoid a dangerous situation for the skier as described in Rule 13.8.
The distance shall be communicated after each scoring jump. If the distance of a skier has not been communicated before he is due to take his next jump, he may request his distance before starting.

Rule 11.8. The result of a skier falling

Every time a skier falls from the time he has started until the carrier goes around the deflection pulley after the ramp, it shall count as a registered jump, for which he receives no score.

Rule 11.9. Officials

There will be three judges for the event.

Rule 11.10. Timing

The Technical Officer shall observe the accuracy of the speeds and speed changes.
When the jump speed is above the maximum allowable a rerun is mandatory. If the speed chosen is below the maximum and the speed is out of tolerance, the skier shall have the option of a reride as long as the maximum speed tolerance was not exceeded, in which case the reride is mandatory. In case of a mandatory reride, the pass leading to the reride will not be scored.
If the jump speed is below the minimum allowable, the skier has an optional reride.
In case of an optional reride, the jump shall not be scored less than the distance obtained in the pass leading to the reride.
If a rerun is given because of an error in speed, it must be taken immediately, or, in the case of a fall, when the skier returns to the start dock.

Rule 11.11. Safety Equipment

All skiers in jumping events must wear approved life jackets and suitable helmets.

Rule 11.12. Jump distance measuring

There are two approved jump measuring systems:
- The Böttcher Video measurement system.
- The Corson Video measurement system.

All systems must be checked and approved by the Homologator after installation.
Also other system can be used if checked and approved by the Homologator.

Rule 11.13. Use of a video jump measurement system

The distance shall be measured to the skier's point of impact in the water closest to the ramp (first point of impact) and then an adjustment offset of 2,1 m shall be added.
For the video system, there shall be two designated officials who shall jointly agree on the impact

point. These officials can also be event judges if they have a full and direct view of the jump course. The calculated distance shall not be displayed until the impact point is decided upon.
Videotaping or hard disk recording shall be used as backup.

Rule 11.14. Scoring

Jump distance shall be scored in increments of 10 cm only.
The longest jump of each round will be the only one counted. The skier's result from the final round will determine his placement in the event. If a majority of the Appointed Judges decide that it is physically impossible to complete the final round of the event, placement will be from the results of the preliminary round.
The better result obtained by the skier, in either the preliminary or the final round, shall count towards the individual overall.
To be considered for placement the skier must have started in this event.

Rule 11.15. Ties

If a tie exists for first place, it shall be run off. If a tie exists for second or third place, placement shall be decided on the basis of the higher preliminary round score. If a tie still exists, it shall be run off. The run off shall have a new drawing of order. Each tying skier shall be allowed two jumps with the longer jump being scored according to Rule 11.14. Repeated ties shall be run off in the same manner until broken.

Rule 12. Slalom

Rule 12.1. General

The skier shall follow the main running cable around the deflection pulley before the slalom course, pass around the outside of all 6 buoys, and after rounding the 6th buoy, proceed through the end gate, and ski until the carrier has passed the deflection pulley after the slalom course to qualify for the next pass.
At the maximum slalom speed the following tow lengths shall be used:

1st pass	18,25 m rope
2nd pass	16,00 m rope
3rd pass	14,25 m rope
4th pass	13,00 m rope
5th pass	12,00 m rope
6th pass	11,25 m rope

In any further passes, the rope shall be shortened by half a meter. If needed, the first speed may be lowered in 3 km/h increments and then proceed upwards again in the same 3 km/h increments up to the maximum speed for the division and age category. The skier has to do one pass after another without falling until the maximum speed has been achieved. Then the skier will proceed as shown in the table.
The finals shall start with the rope length or slalom speed that was passed in the preliminary round by all skiers that take part in the finals in that division and age category unless changed by the Event Judges.
The skier or his representative shall announce the rope length or slalom speed at which he elects to start on a published time close before the estimated start of that series or event. A skier who fails to announce the rope length or slalom speed at which he wants to start, shall have to start at the published start rope and speed.
Further the skier has to inform the Technical Officer at which speed he desires to leave the starting jetty.
Acceleration from start speed to slalom speed shall be done directly after the skier has started.

Rule 12.2. Refusal of a skier

A skier may refuse to enter the slalom course by raising one arm in the air. He shall not be penalised for so doing providing this refusal was for a reason judged acceptable by the Event Judges. The skier must be ready to ski immediately after the decision of the Event Judges. Should the skier not be ready or should the reason be judges not acceptable by the Event Judges, he should be disqualified from the remainder of that round in the event.

Rule 12.3. Competition area

The competition area begins at the last deflection pulley before the 1st slalom buoy and finishes at the next deflection pulley (see Diagram 9).

Rule 12.4. Buoys

The colour of buoys shall be selected for maximum visibility. For the Slalom and exit gate buoys a fluorescent red or yellow colour is recommended.
Middle line buoys in the slalom course shall be a different colour from the slalom and exit gate buoys. White or yellow is recommended.
Slalom and exit gate buoys shall be 22 to 28 cm in diameter. 23 cm is recommended. Middle line buoys shall be 22 to 30 cm in diameter.
All buoys shall be of a lightweight, pliable material with smooth exposed surface.
Each buoy shall have a strong loop for attaching anchor lines. The buoys must be attached to the anchor line by the use of a system that will tighten the buoy in such a way as to ensure that it does not move around from its position.
Slalom buoys shall be fastened so that they have 11 to 17 cm of height out of the water. 11,5 cm is recommended. The exit gate and middle line buoys shall be fastened so that they have 16 to 22 cm of height out of the water. 17 cm is recommended.

Rule 12.5. A fall in Slalom

A fall before or in the course concludes the performance of the skier, but he shall receive credit for buoys scored before the fall.

Rule 12.6. Scoring buoys

A buoy not missed is scored as follows, up to the point of the first miss:

a) ¼ buoy when the skier crosses the line C-D, in a skiing position (Rule 10.3), before the buoy to be rounded. The skier shall not receive the ¼ buoy if he passes inside the buoy.
b) ½ buoy when the skier has re-crossed line C-D in a skiing position (Rule 10.3), before the level of the next buoy or exit gate.
c) 1 buoy when the skier has crossed the middle-line under the main-running cable, marked by middle line buoys, before passing the level of the next buoy or the gate without falling (Rule 10.2).

(see Diagram 10)
A deflection pulley or the end gate is not scored at all.

Rule 12.7. End of the slalom run

A skier in either a preliminary or final round may continue to run the course as provided in Rule 12.1 until he misses a buoy or the exit gate, at which point his scoring ends for that round.

Rule 12.8. A miss or „riding over“

It is a miss to ride inside the buoy or outside the end gate or to ride over, straddle or jump over a buoy or an exit gate buoy or to jump through the exit gate; but there is no penalty for grazing a buoy with a ski or part of the body.
„Riding over“ shall be defined as hitting a buoy with the ski so as to move it significantly from it‘s position or temporarily sink it. Hitting a buoy less severely shall be considered as „grazing“.

Rule 12.9. Slalom towers

The slalom judging towers shall be braced structures having a platform with railing approximately 2 - 3 m above the water surface. They may either rest on the bottom or be securely anchored in position. The slalom judging towers should be positioned to provide the best possible view over the entire slalom course. It is **not** recommended to use the ramp as a slalom tower.

Rule 12.10. Judging slalom

Please see Rule 15.2. for the applicability of the different slalom judging variations in dependency of the homologation level. Any video used in Slalom shall be recorded so that a review is possible.
a) Use of a centerline video. A video camera shall be located at the end of the slalom course, facing the skier and as much as possible in the central axis of the slalom course (see Diagram 9). The camera shall be installed in a height of 3.0 to 3.5 meter above the water level. The camera shall be

equipped with optical (not digital) zoom of sufficient power and adjusted to show the skier, the centerline and the buoy to be rounded.
5 or 3 judges shall be located on one tower from where they can view the centerline video. Each judge shall judge the slalom buoys and the end gate independently.
In case these judges are located on a tower from where a view on the slalom course is not possible, it is recommended to place two additional judges in a position from where they can watch the course to inform the Chief Judge, Technical Official and the appointed judges from any irregularity.
b) Use of an end gate video. A video camera shall be located to display the end gate and the 6th buoy at all times. (see Diagram 9)
3 judges shall be located on one tower in the middle of the course. Each judge shall judge the slalom buoys and the end gate independently. All three judge must be able to see the live stream from the exit gate video camera without turning away from the course.
c) No video used.
There shall be three judges on the first judging tower and two judges on the second judging tower placed in a suitable position to judge the exit gate. Skier buoys shall be judged by all five judges. The exit gate shall be judged only by the two judges on the exit gate tower unless they are not in agreement, in which case all five judges will vote on the exit gate.

Rule 12.11. Timing

The Timer shall inform the responsible official of wrong speeds to take the necessary action.
Where the applicable speed is slower than allowable on any pass, a rerun shall be mandatory. If the pass was not a perfect pass, the skier may not improve his score over that obtained in the slow pass, unless the speed is so slow that it is equal to or below the fast tolerance of the next slower pass. If the pass was a perfect pass (score is 6, skier to continue), the skier may choose to proceed to the next pass instead of repeating the pass. If the skier then makes a perfect pass, he receives credit for both passes. If the pass is missed, he will receive credit for the buoys made as if it were the lower, skipped pass.
Where the speed is faster than allowable and the skier has not made a perfect pass, he shall have an optional reride. If taken, it shall not be scored less than the score obtained on the pass leading to the reride.

Rule 12.12. Safety equipment

All skiers in Slalom events shall be required to wear an approved life jacket.

Rule 12.13. Scoring

The skier's result from the final round will determine his placement in the event. If a majority of the Appointed Judges decide that it is physically impossible to complete the final round of the event, placement will be from the results of the preliminary round.
The better result obtained by the skier, in either the preliminary or the final round, shall count towards the individual overall. He shall get credit for his score on the speed / rope length he was skiing at, under the provisions of Rule 12.1 provided his first pass is perfect. If his first pass was not perfect he shall get credit for his score as if he was skiing at the official start speed or rope length of his division and age category for that competition. The official results must show the official start speed and rope length of the round of the event and the number of buoys scored by each skier on his last pass showing the speed and rope length.
To be considered for placement the skier must have started in this event.

Rule 12.14. Challenging a score

When slalom video is used and if a skier believes that there was an error in a score, he may challenge it by notifying the Chief Judge before the start of the next skier or as soon as is judged practicable by the Judges, and by putting up 250€. The Chief Judge and event judges will review the video (center line or end gate video). If they agree on a score, that will be the given score. If they disagree or agree that the video does not clearly overrule the score given by the judges, then the original score will stand. The 250€ will only be returned if the original score was changed.

Rule 12.15. Ties

If a tie exists for first place, it shall be run off. If a tie exists for second or third place, placement shall be decided on the basis of the higher preliminary round score. If a tie still exists, it shall be run

off. The run off shall have a new drawing of order. The tie breaking run shall begin with the scheduled speed and rope length of the last complete pass and conclude with the first miss. Repeated ties shall be run off in the same manner until broken.

Rule 13. Tricks

Rule 13.1. General

Each skier shall be allowed two passes through the trick course during which time he may perform as many tricks as he desires. The trick skier is not allowed to take the two passes consecutively.

Rule 13.2. Refusal of a skier

A skier may refuse to enter the trick course by raising one arm in the air. He shall not be penalized for so doing providing this refusal was for a reason judged acceptable by the Event Judges. The skier must be ready to ski immediately after the decision of the Event Judges. Should the skier not be ready or should the reason be judged not acceptable by the Event Judges, he looses the right for that pass and this pass will not be considered as a registered pass.

Rule 13.3. Competition area

The competition area begins at the last deflection pulley before the trick buoys and finishes at the next deflection pulley (see Diagram 11). A set of buoys after the deflection pulley shall establish the area of the beginning of the trick pass. The end of the pass shall be signified by the 20-second time interval only.

Rule 13.4. Speed

The skier shall receive his choice of a constant speed through the course for each pass. The speed in trick skiing, assuming it is held constant from the deflection pulley before entering the course, is the skier's responsibility.
The skier shall inform the Technical Officer what speed he desires on each pass.

Rule 13.5. Start of trick pass timing

After passing the approximate position of the first trick buoy the beginning of the trick pass shall begin:

a) for a surface trick, at the first discernible rotation of the ski from the tracking direction (or position)
b) for an air trick, at the earliest of the following to occur:
    1. at the first discernible rotation of the ski from the tracking direction (or position)
    2. when the ski under the binding of the leading foot leaves the water surface no longer supporting the weight of the skier
c) If the skiers fails to make any such movement, as the skier passes the second trick buoy.

Rule 13.6. End of the trick pass

The trick pass shall end:
a) 20 seconds after the start of the pass.
b) when the skier falls in the course.

Rule 13.7. A fall before the pass

If a skier falls while practising before the pass, he loses the right to that pass.

Rule 13.8. Use of a release or braking the cable

If a skier wishes to use a release he must inform the Technical Officer beforehand. The skier uses the release entirely at his own risk.
The skier may provide an observer to instruct the Technical Officer to stop the cable. The skier is fully responsible for any braking of the cable and no request for reride will be granted upon premature or accidental braking.

Rule 13.9. Officials

Please see Rule 15.2. for the required number of judges scoring tricks in dependency of the

homologation level. Each judge shall watch and record the tricks independently. He shall list each trick attempted by the skier and decide with respect to each trick:
a) if it was performed according to the rules governing that trick.
b) if it was started after the beginning or completed before the end of the pass (only in case of non-video timing).

Rule 13.10. Communication with the Judges

Skiers in the Trick event or other persons shall not communicate with the Event Judges between passes for the purpose of determining whether a trick or tricks attempted in the pass were scored.

Rule 13.11. Timing the trick pass

Please see Rule 15.2. for the applicability of the different timing variations in dependency of the homologation level.
a) Video timing. A video timing device must enable the timer(s) to move the video recording forward and backward frame by frame in order to determine the beginning of the trick pass as defined in Rule 13.5. The end of the 20 second pass shall be determined by the video timing device. The timer(s) shall then make a determination of the last trick in time. For this it must be possible to move again frame by frame through the video recording in order to recognize the trick.
If there are two timers assigned to the trick timing and they have agreed on the last trick, it shall be official. If they can not agree on the last trick, the Chief Judge shall make the determination of the last trick.
If there is one timer assigned to the trick timing he shall make a determination of the last trick in time. If the Chief Judge agrees with this determination, it shall be official. If the Chief Judge disagrees, then it is the responsibility of the event judges to determine the last trick in time.
b) Non-video timing. There shall be a timer and a backup timer located at a point that will allow them to best determine the start of the trick pass. The timer shall start the timing device at the beginning of the trick pass as defined in Rule 13.5. At the end of 20 seconds the audible device shall sound. Some form of backup device for the audible signal must be provided in the event that the official device fails to operate.
The audible device to signal the end of the pass shall be located in the center of the course, so that it is most audible for the judges.
Where an automatic timing device is available which can select the median of five separate triggering signals, the Event Judges may collectively serve as the official timer.
An audible signal different from the end of pass signal indicating the start of each pass shall be given by the timing device to the judges.

Rule 13.12. Judging tricks

Please see Rule 15.2. for the applicability of the different trick judging variations in dependency of the homologation level. Any video used in Tricks shall be recorded so that a review is possible.
a) Use of a centerline video. A video camera shall be located at the end of the trick course, facing the skier and as much as possible in the central axis of the trick course (see Diagram 10). The camera shall be installed in a height of 3.0 to 3.5 meter above the water level. The camera shall be equipped with optical (not digital) zoom of sufficient power and adjusted to show the skier clearly.
5 or 3 judges shall be located on one tower from where they can view the centerline video in real time. The recording of the same centerline video shall be used for immediate video review.
b) Use of a non-centerline video. The tricks shall be filmed by a video camera from a position as close as possible to the position of the Event Judges. 5 or 3 judges shall be located on one tower near the center of the trick course. They shall either watch the non-centerline video or the skier for judging. The recording of the non-centerline video shall be used for immediate video review.
c) No use of video. 5 judges shall be located on one tower near the center of the trick course. They shall watch the skier for judging. The tricks shall be filmed by a video camera from a position as close as possible to the position of the Event Judges. This video shall be used if required as described below (not for immediate video review).

Rule 13.13. Use of the video camera

The immediate video review shall consist of a immediate replay of the pass at normal speed to allow the Event Judges to check what they have written. Then the sheets are handed in. The video review should not lead to a delay of the start of the next skier.
The video film may only be shown additionally as an aid to the Event Judges under the following

circumstances:
a) At the request of the Chief Judge or the Chief Calculator, if it is not possible for the Calculators to obtain a majority decision as to the trick or tricks performed.
b) At the request of the Chief Judge or the Chief Calculator, if it is not possible for the Calculators to obtain a majority decision as to whether or not credit is to be given for a trick.
c) In circumstances which the Chief Judge regards as exceptional. This request should not be granted if the intention is to change a Judge's decision under Rule 13.9.
d) At the request of the Chief Judge, or a Judge or a Calculator (and approved by the Chief Judge) the video may be reviewed to establish credit or no credit of a trick or tricks provided it is stated which trick(s) they wish to review. It is not the intention to review the entire run.

The video will only be shown at normal speed.
The audio of the video camera recorder shall pick up the sound of the audible signal, which indicates the end of the 20 seconds.

Rule 13.14. Credit for tricks

The skier shall receive credit for up to the 14 highest scored tricks in each pass.
To receive credit for any trick the skier must remain in or return to skiing position.
Only tricks listed in the rules will be scored in a competition.

If a skier falls on his first pass, he may choose to repeat it as his second pass. He may also continue from where he fell and progress into the second pass.

Rule 13.15. Tricks at the end of the pass

A trick not completed before the end of a pass shall not be scored.
A trick completed before the end of a pass shall not be scored if the skier ultimately falls as a result of that trick, even if the fall is after the conclusion of the pass.

Rule 13.16. Trick lists

A list of declared tricks to be attempted by the skier shall be required from each competitor in the trick event before the event starts. The Chief Judge and the Chief Calculator shall determine the exact time when the list must be submitted for the preliminary and the final rounds. The trick list shall be prepared using the official codes shown in the table of trick values. Reverse turns must be indicated by an R preceding the official code. In each declared trick pass, the skier may list only one trick and its associated reverse, if any, on two skis and one trick and its associated reverse, if any, on one ski under each number in the table, except that any type of 180^0 turn may be listed more than once. There is no penalty for not following the list.
A contestant who fails to submit a trick list shall be disqualified from that trick round. A skier may submit a different trick list for the event finals if he so desires. The declared list shall be made available to the officials at the discretion of the Chief Judge.

Rule 13.17. Calculation of the trick result

The Calculators shall receive the tabulations and, in the event of a discrepancy, shall decide the tricks to be scored on the basis of a simple majority from among the Judges' individual tabulations as to:
a) what trick was performed;
b) if it was performed according to the rules governing that trick; and
c) if it was started after the beginning or completed before the end of a pass.

If there is more than one sequence that can be scored, the sequence that gives the maximum points shall be used.
Each trick shall be credited to the competitor with the points as given in Appendix 1a and Appendix 1b.

Rule 13.18. Trick descriptions

a) Except in the case of attempted side slide turns, a trick is any activity that occurs between two hesitations. In the case of an attempted side slide, the hesitation in the 90^0 position is to be ignored in applying this rule. Credit may be received for performance of only one trick and the associated reverse, if any, on one ski under each number in the table. If this rule is violated, only the higher scoring of the repeated tricks shall be scored.
   Tricks are only credited if at the end of the trick the weight of the skier is fully supported by his ski or skis on the water.

b) An air turn not completely done in the air scores zero. No part of the ski shall touch the water between the point of the initial lift out of the water and the landing. Equally a water turn not completely done on the water scores zero.
c) A reverse trick must immediately follow the basic turn in the same pass; however, any type of 180^0 turn is allowed between two such turns. The reverse shall not be disallowed simply because it follows an attempted trick which has not been credited or because the basic trick is a repeated trick. Reverse turns under Trick 5 are limited to 360^0 but may follow a 360^0, 540^0 or 720^0. Reverse tricks under Trick 12 are limited to 540^0 but may follow a 540^0 or 720^0. On one ski and two skis only one basic trick and one reverse are allowed under Trick 27 and under Trick 28, but may be any reverse trick listed, i.e. the original may be a WL5, WLL5 or a WL7, and the reverse may be any reverse of any of the above. On one ski and two skis only one basic trick but no reverse are allowed under Trick 13, 34, 36, 37, 38, 42, 43, 45, 46, 47 and 49. In order to score the basic and reverse of any trick they must both be performed in the same pass. In order to receive higher points for the reverse trick, the basic trick must be scored according to Rule 13.16. In case the basic trick is not scored, the reverse trick, if scored according to Rule 13.16, shall only receive points as if it would be the basic trick.
d) Stepover line tricks are complete only when the free foot touches ski or water or the lifted ski touches water after the turn before the next trick or the end of the pass. The skier may not lay his leg or lifted ski across or on top of the line, the handle, or either arm until he begins to execute the trick. The stepover and turn actions must be simultaneous.
Immediately on completion of a FB stepover turn, the skier must have at least one arm between his legs holding the handle.
A jump stepover 360^0 consists of a 180^0 stepover and a 180^0 jump combined, in either order, all done in the air, in a continuous turn. A jump stepover 540^0 consists of a 180^0 jump stepover and a 360^0 jump combined, in either order, or a 180^0 jump stepover preceding and followed by a 180^0 jump combined, all done in the air in a continuous turn. A jump double stepover 540^0 consists of a 180^0 jump stepover and a jump stepover 360^0 combined in either order, all done in the air in a continuous turn.
A stepover turn not performed according to the rules for a stepover but according to the rules for a 180^0 or 360^0 surface or jump turn shall be scored zero.
Toehold stepover tricks must be a simultaneous action. The towing foot may not touch the water during execution of the toehold stepover. except that at the end of the trick after the stepover and turn are complete either the towing foot or the ski may touch down first.
e) All side slides include a 90^0 turn from skiing position, a hesitation in the 90^0 position and a return to the skiing position in the original direction.
f) In ski line tricks, both feet must be on the ski and pass over the line while in mid-air. The feet may pass over the line at any point during the execution of the trick. The line must be out of the water during the execution of the trick.
g) To receive credit for a flip, it is required that both feet must be higher than the head and in approximately the same vertical plane at some point during the execution of the trick. A Front Flip shall be defined as a forward somersault done in the air in which the tail of the ski passes up and over the head as the head goes down and forward and the rotation must be in the direction of travel. Both feet must be above the head and in approximately the same vertical plane at some point during the execution of the trick. For flips with body rotation the body rotation must be done simultaneously with the flip, not before or after. A Flip Front-Back is not considered a 180^0 turn either for purposes of declared tricks as referenced in Rule 13.16 or for reverse turns as described in Rule 13.18c. The reverse Back Flip is defined as a Back Flip leading with the opposite shoulder and travelling in the opposite direction (right to left vs. left to right) from the original Back Flip. Additionally, for the WFLIPBFB, the reverse must land in the opposite wrap or turn in the opposite direction.
WFLIPB5F and WFLIPB5B must be done hand-to-hand. The rope may not be wrapped around the body to assist the turn. This does not prohibit the simple back position wrap where the rope does not go around the body.

Rule 13.19. Scoring

The skier's result from the final round will determine his placement in the event. If a majority of the Appointed Judges decide that it is physically impossible to complete the final round of the event, placement will be from the results of the preliminary round.
The better result obtained by the skier, in either the preliminary or the final round, shall count towards the individual overall.
To be considered for placement the skier must have started in this event.

Rule 13.20. Ties

If a tie exists for first place, it shall be run off. If a tie exists for second or third place, placement shall be decided on the basis of the higher preliminary round score. If a tie still exists, it shall be run off. The run off shall have a new drawing of order. Each tying competitor shall be allowed one pass until the tie is broken. Repeated ties shall be run off in the same manner until broken.

Rule 13.21. Recommended Trick event modes

Depending on which side of the course the trick event is held, two different ways are recommended.
Case 1: The trick course is on the opposite side of the start. One skier shall always be on the water. All skiers use the same carrier, eventually it is even possible that the next skier starts with the carrier previous to the one the skier actually on the water is using.
Case 2: The trick course is on the starting side. For low level competitions it might be possible that the skier starts immediately his trick run after leaving the dock and passing the 40 m buoy. For any other competitions a „diagonal“ mode should be used: The first skiers leaves the dock. When he passes the pylon opposite to the start (which is then the second (in case of a 4 corner cable) or third (in case of a 5 corner cable) pylon the next skier starts. When the first skier passes the start again he will come to the trick buoys and start his trick run (see Rule 13.5). After completing his trick run without fall the skier has to let go his rope before reaching the next wheel. Then the next skier can start his trick run (as per Rule 13.5). Also this skier has to let go his rope before reaching the next wheel in case of a successful trick run without fall. A skier not letting off the rope after his run shall be disqualified.[3]

Rule 14. Records

Rule 14.1. What records are recognized

The IWWF shall recognize World Records for jump distances, slalom performances and trick points for the Men's and Women's divisions. The Confederations may, in addition, recognize Confederation Records under the same standards provided for World Records. The Confederations may, however, recognize Records for divisions other than those recognized by the IWWF. The Confederation in which a record may be recognized shall be determined by the nationality of the skier rather than the location of the competition.

Rule 14.2. Competitions where records may be set

Records may be set only at competitions homologated by the IWWF, a Confederation, a Federation, or the Cableski Council of the IWWF.
In any one competition, no more than four rounds are eligible for setting records. The eligible rounds must be declared before the start of the competition.

Rule 14.3. Jump records

A jump shall be a new record if it exceeds the current official record. If the distance equals the established record, the skier will become co-holder of the established record.
For jump records only the distance will be considered regardless of the ramp height.

Rule 14.4. Slalom records

A slalom performance shall be a new record if it exceeds the current official record. If the score equals the established record, the skier will become co-holder of the established record.

Rule 14.5. Trick records

A trick performance shall be a new record if it exceeds the current official record. If the result equals the established record, the skier will become co-holder of the established record.

Rule 14.6. Ties in an event

In the event of equal performances in a round of a competition, which equals or exceeds the current official record, the record shall be co-held no matter which skier may be the ultimate winner

[3]Please note that the case 2 is not possible as described here when immediate video review is used.

of the event.

Rule 14.7. Record forms and criteria

Specifications of equipment, courses and measuring devices shall be set by the IWWF Record Application Forms, which must be completed and certified by the Confederation Cableski Council Chairman, by the Chief Judge, by the Homologator and other required officials.
These record forms shall require that for a jump or trick record, the performance must be video taped.

a) Tricks. Video will be taken as per Rule 13.12. This video will be viewed in regular speed by the Event Judges for record verification. Although the record verification cannot change the score recorded in the competition, the score may be changed for the record submission.
b) Jump: The Homologator shall send the video recording and the gif files for control by the IWWF Cableski Council.

All videos will be sent with the record forms to the Chairman of the IWWF Cableski Council. All submitted videos will be VHS Tapes or on DVD.

Rule 14.8. Record administration

a) World Records may only be set at competitions sanctioned by the IWWF, a Confederation, or an affiliated National Federation. In some instances, a Confederation or Federation may specify specific events as record capability. In this instance, only performances from such specified events shall be considered for World Records.
b) At competitions where World Records may be set, the Homologator shall be responsible for supplying the Chief Judge with the technical information required by the IWWF Record Application Form.
c) The Chief Judge shall be responsible for the completion of the required application. The completed form shall be sent by the Homologator within one week of the completion of the competition to:
   - The skier's National Federation.
   - The Chairman of the Confederation Cableski Council where the record was performed.
   - The Chairman of the IWWF Cableski Council.

   Under no circumstances will a record application be considered unless the appropriate record application forms are completed and all rules conformed to within the stated time limits of one week (7 days).
d) Upon receipt of the form and the necessary support documentation, the Chairman of the IWWF Cableski Council will either approve or disapprove the application and will advise the members of the IWWF Cableski Council and the IWWF President of his decision.
e) The record will then be official, pending final ratification by the IWWF Cableski Council and the President of the IWWF.
f) The IWWF Cableski Council and the President of the IWWF must advise the Chairman of the IWWF Cableski Council of their ratification or disapproval within 30 days of their receipt of the information.
g) Records shall be ratified if approved by a two-thirds majority of the IWWF Cableski Council. There shall be no proxy voting.
h) Should the Homologator and/or Chief Judge fail in the responsibilities of these duties, sanction shall be determined and levied by the IWWF Executive Board following receipt of a report by the Confederation Cableski Council Chairman.
i) In the unusual instance where a potential World Record performance occurred and it was intentionally not applied for as a World Record, the Homologator, Chief Judge, skier, and Federation may be subject to the IWWF Constitution.
j) Confederational records can never be higher then World Records.

Rule 15. Homologation Guidelines

Rule 15.1. General

It is a requirement for any type of homologation that a competition has a minimum of 8 competitors in each event and the confederational Cableski Council is satisfied it is a genuine competition.
At all types of Homologated Competitions, the Homologator shall post a notice before the start, showing which disciplines and which class of Homologation in each case he is recommending to the confederational Cableski Council. The Homologator has no discretion to recommend a class of Homologation if all the requirements are not completely fulfilled. The confederational Cableski

Council, at their discretion, may subsequently award a higher class of Homologation.

Rule 15.2. Homologation Levels

	World Record (RC)	Ranking List (RkL)	Normal (NOR)
Prior Announcement of Homologation Level to Skiers	Yes	Yes	Yes
Prior Notification of Homologation Level to Confederational Cableski Council	Yes	No	No
Confederation Approved Panel	Yes	No	No
Max. Number of Rounds	4	4	4
Chief Judge	1st Class	1st Class	2nd Class
Homologator	International	International	National
Technical Officer	International	National	National
Duplication	None	Max. 2 functions, except Trick Event Judge may not be Calculator in Trick events	Max. 2 functions
Direct drive	Mandatory	Mandatory	-
Jump			
Course Check	Survey by theodolite	Survey by theodolite	Survey by theodolite
Tolerances	Per Rule Book	Per Rule Book	Per Rule Book
Timing	Automatic	Automatic	Automatic
Calculator	International	National	National
Judges	3 x 1st Class	1 x 1st Class / 2 x 2nd Class minimum ([4])	3 x 3rd Class minimum
Slalom			
Course Check	Survey by theodolite	Survey by theodolite	Survey by theodolite
Tolerances	Per Rule Book	Per Rule Book	Per Rule Book
Middlebuoys	Required	Optional	Optional
Buoys	Measured	Visual check	Visual check
Timing	Automatic	Automatic	Automatic
Judging towers	Video slalom judging	Both sides or one side ([5]) or one side + video ([6])	One side
Calculator	International	National	National

[4] 2 Judges must be Cableski Judges, the other may be an International Tournament Judge.
[5] Both sides are preferable, however if technically not feasible two towers on one side can be accepted.
[6] Video means an end course / gate video from which the 6th buoy and the end gate can be seen. The judges must be able to see the video stream live on the judges tower. In this case one tower is acceptable in the region of buoy nbr. 3.

	World Record (RC)	Ranking List (RkL)	Normal (NOR)
Judges	5 Judges plus Center line video. Minimum qualifications: 3 x 1st Class / 2 x 2nd Class.	5 Judges, no video (Qualifications: 1 x 1st Class / 3 x 2nd Class / 1 x 3rd Class or 3 x 1st Class / 2 x 3rd Class minimum ([7])) or 3 Judges (Qualifications 1 x 1st Class / 2 x 2nd Class minimum) + Center line video or End gate video ([8]) ([6])	5 x 3rd Class minimum or 3 x 3rd Class minimum + Center line video or End gate video ([6])
Tricks			
Course Check	Visual	Visual	Visual
Tolerances	Per Rule Book	Per Rule Book	Per Rule Book
Timing	Video timing	Video timing	Non-video timing
Qualification of video timing judge	2nd Class minimum	3rd minimum	-
Calculator	International	International	National
Judges	5 x 1st Class + center line video followed by immediate video review	2 x 1st / 1 x 2nd Class + center line video followed by immediate video review or 1 x 1st Class / 3 x 2nd Class / 1 x 3rd Class minimum + immediate video review	5 x 3rd Class minimum or 1 x 1st Class / 2 x 3rd Class minimum + immediate video review

Rule 15.3. Surveying Equipment

The surveying instrument must have an accuracy of 20 seconds or better. All slalom and jump courses shall be checked with that instrument.

Rule 15.4. Jump

For the use of a video jump system the required coordinates (camera, jump ramp, buoys) shall be calculated by the survey of the Homologator.

Rule 15.5. Slalom

All skier buoys and end gates must be measured (diameter and height) for record submission.

Rule 16. World Ranking List

Rule 16.1. General

The World Ranking Lists are prepared from the performances of the published results of World Record Capability homologated or Ranking List homologated competitions.
If a performance in a Ranking List homologated competition exceeds the current World Record, it will be placed on the ranking list as one increment below the current record. If a record score is made in a World Record Capability homologated competition, but is subsequently rejected then the corrected score shall be used.

[7] If 5 Judges are used, 2 Judges must be Cableski Judges with 1 x 1st class and 1 x 2nd class minimum, the other 3 may be International Tournament Judges.
[8] 2 Judges must be Cableski Judges, the other may be an International Tournament Judge.

Rule 16.2. Events

World Ranking Lists will be published for Slalom, Trick, Jump and Overall. The Overall Ranking List will be calculated from the skier's scores in each of the single events (Slalom, Tricks and Jump).

Rule 16.3. Categories

There will be only one World Ranking Lists for Men and one World Ranking List for Women.
In order to be included in the World Ranking List the following minimum results have to be achieved:

	Men	Women
Slalom	0,25@58/18.25	0,25@52/18.25
Tricks	2000 pts	1500 pts
Jump	27 m	20 m

Rule 16.4. Schedule and submission process.

October 31: This is the closing date of the list. Only performances on or before this date are accepted in the current year's listing.

December 31: The preliminary list is published and distributed. Each Federation must verify the performances and submit any corrections with appropriate documentation.

February 28: This is the closing date for any final corrections.

March 15: The finalized list is published and distributed.

April 30: In Cableski World Championship's years, a second list will be published using this as a last performance date.

May 30: Final publication of the list in a World Championship's year.

Rule 17. Cableski Officials

Rule 17.1. General rules for International Cableski Officials

The following different types of International Cableski Officials exist:

- 1st Class Cableski Judges
- 2nd Class Cableski Judges
- International Cableski Homologators
- International Cableski Calculators
- International Technical Officers

An International Cableski Official must be quite impartial in the execution of his function and always conscious of the fact that he is responsible to the Cableski Council and not the the Federation concerned.
An International Cableski Official will be expected to perform such functions and tasks allocated to him by the Chief Judge, unless there be valid reason to the contrary, even at a competition he is attending without an assigned function, should the board of Officials so require.

Rule 17.2. Examinations of International Cableski Officials

The nomination of International Cableski Officials and the organisation of examinations are under the sole responsibility of the confederational Cableski Council and its Chairman, who will also appoint the examiners.
Applications for examination for international Cableski officials will be submitted by the Federation concerned, which will send the applications of their candidates to the Chairman of the confederational Cableski Council one month before the proposed examination. Each such application must be submitted on the special application form placed at the disposal of the Federations by the confederational Cableski Council.
Unless the confederational Cableski Council rules otherwise the minimum age for a 1st Class

Cableski Judge or an International Cableski Homologator is 21 years and for a International Cableski Calculators is 18 years (during the year of the exam).
A candidate for a 1st Class Cableski Judge's exam must already be a 2nd Class Cableski Judge or a 2nd Class Tournament Judge. He shall also have judged under the control of members of the confederational Cableski Council or its appointed representative, at least 4 times at Ranking List or Normal Homologated competitions, the Dossiers of which have been submitted to the Chairman of the confederational Cableski Council.

Examinations are in two parts, Theoretical and Practical. In order to qualify as an international Cableski official it is necessary to pass both parts and they must be taken during the same season.

Function	Theoretical part	Practical part
1st Class Cableski Judge	Written questions on how to organise and lead a competition and concerning the Cableski Technical Rules. To succeed the candidate is required to obtain 80% of the total number of points available. The use of the rulebook (neutral without any notes in it) is allowed.	Writing trick runs. 10 passes of 20 seconds of at least 4000 points in each pass without falls. Each such pass with two or more errors will be counted as a failure. Judgments of whether or not a trick is valid or is not valid, even if the Jury disagrees, are not considered errors.
2nd Class Cableski Judge	Written questions concerning the Cableski Technical Rules. To succeed the candidate is required to obtain 80% of the total number of points available. The use of the rulebook is not allowed.	Writing trick runs. 10 passes of 20 seconds of at least 2500 points in each pass without falls. Each such pass with two or more errors will be counted as a failure. Judgements of whether or not a trick is valid or is not valid, even if the Jury disagrees, are not considered errors.
International Cableski Homologators	Written questions concerning the homologation parts in the Cableski Technical Rules. A Homologation Dossier, including record applications will be completed. To succeed the candidate is required to obtain 80% of the total number of points available. The use of the rulebook is not allowed.	Measurement of a slalom course. Set up and check of a officially recognized jump measurement system.
International Cableski Calculators	Written questions concerning the calculation parts in the Cableski Technical Rules, including memorising the commonly used trick values. To succeed the candidate is required to obtain 80% of the total number of points available. The use of the rulebook is not allowed.	Working as an assistant Cableski International Scorer at a homologated Cableski Competition and demonstrating his ability to carry out all Cableski International Scorer functions alone.
International Cableski Technical Officer	Written questions concerning the cable operation in the Cableski Technical Rules. To succeed the candidate is required to obtain 80% of the total number of points available. The use of the rulebook is not allowed.	Work as Assistant Cableski Technical Officer at three Cableski Competitions, one of these outside his country.

Rule 17.3. Rules for 1st Class Cableski Judges

First Class Cableski Judges are authorised to judge all Cableski Competitions, including Confederational and World Cableski Championships.

Rule 17.4. Rules for 2nd Class Cableski Judges

Second Class Cableski Judges are authorised to judge all Cableski Competitions, with the exception of World Cableski Championships.

Rule 17.5. Rules for International Cableski Homologators

International Cableski Homologators are authorised to work at all Cableski Competitions.
The Homologator is in charge of all technical matters concerning the Homologation of a Cableski Competition and shall remain in continuous contact with the Chief Judge who will, however always be the only arbiter of whatever decisions need to be taken.
A Homologator may propose to a Chief Judge that a competition be stopped, but may not take this decision without the agreement of the Chief Judge.
The Homologator has to assure himself of the technical comparability of the competition with other competitions. For that he has to check all the installations ashore and on the water and ensure that all those installations are in due conformity with the Cableski Technical Rules. He shall also ensure that during the competition any changes of the Cableski installation do not cause advantage or disadvantage to any competitor.
When it is necessary the Homologator, having decided that it is unavoidable, shall state that an event in a competition can not be duly homologated, this must be posted on the notice board, duly signed prior to the competition and the facts sent to the Confederational Cableski Council with the Dossier.

Rule 17.6. Rules for International Cableski Calculators

International Cableski Calculators are authorised to work at all Cableski Competitions.

Rule 17.7. Rules for International Technical Officers

International Technical Officers are authorised to work at all Cableski Competitions.
The Technical Officer shall ensure the utmost fairness, close adherence to the rules and impartiality of the competition as far as the cable operation (speeds, accelerations) is concerned. The Technical Officer is under the authority of and responsible to the Chief Judge. Incorrect speeds or failure to accelerate or decelerate in a proper manner, shall be immediately communicated to the Chief Judge.
International Technical Officers shall not be required while on duty to carry out additional functions as Starter, Timer, etc.

Rule 17.8. Voting of the judges

Every vote of the Appointed Judges or the Event Judges shall be decided by a simple majority of the judges voting. In the event of a tie, the Chief Judge shall cast the tie-breaking vote. If a person has more than one function, he will not have more than one vote.
All issues for the actual event should be settled before the next skier starts.

Rule 17.9. Placement of judges

Where practical, judges shall be separated to ensure completely independent opinions.

Rule 17.10. Secondary positions

Personnel to fill secondary positions shall be selected by the Chief Judge from among other experienced Judges and Officials in attendance. Wherever possible, Officials filling complementary positions (e.g. timer) should be of different nationalities.

Rule 17.11. Scoring sheet availability

The scoring sheets of each Judge shall be made available *for a period of 30 minutes* for inspection by the Team Captains as soon as the results are posted. Under the Team Captain's responsibility, a skier and his coach may view the skiers scoring sheets.
If the results are not available 30 minutes after the last skier of the day, the official posting will be delayed to one hour prior to the first skier of the next day. The unofficial results should be posted as

soon as they are available.

Rule 17.12. Tolerances

All tolerances are to allow for human error and the intentional use of tolerances by Cableski Officials to improve skier performance will not be tolerated. In any activity involving the performance of an official where a tolerance is involved, it is the official's responsibility to attempt to be as close as possible to the actual specification.

Rule 17.13. Assignment to Cableski World Championships

At least 6 months prior to the start of the Cableski World Championships, the President of the IWWF shall appoint the Chief Judge for the Cableski World Championships from among the Chief Judges proposed by each Confederation Cableski Council.
The President of the IWWF Cableski Council shall appoint for the Cableski World Championships the Homologator, the Chief Calculator and the Assistant, the Chief Technical Officer and the additional Technical Officer, the Appointed Judges and the Assistant of the Chief Judge from among the officials proposed by each Confederation Cableski Council.
The appointment of the Assistant to the Chief Judge must be made with the Chief Judge's approval. The judges chosen for the Cableski World Championships must represent the Confederations as follows: A minimum of 2 judges from each Confederation.
A total of 8 judges shall be selected.
The Chief Judge and his Assistant are not included in the above number.
If a Confederation is unable to propose the specified number of qualified judges, the IWWF Cableski Council can appoint additional judges from other Confederations.

Rule 17.14. Event Judges at the Cableski World Championships

The Event Judges for the Cableski World Championships must be chosen by the Chief Judge from the Appointed Judges, preferably as follows:
For Slalom: at least one judge from any one Confederation.
For Tricks: the best panel appropriate for the level of trick performances.
For Jumping: one judge per Confederation

Rule 17.15. Rules for National Officials

National Officials such as 3rd Class Cableski Judges, National Cableski Scorers, National Cableski Homologators and National Technical Officers are responsible to and under the responsibility of their National Federations.

All National Officials are qualified to work at Normal Homologated competitions.
A National Official may be appointed to the panel of a National or International Non-Calendar Competition by his Federation. In the case where the Confederational Cableski Council is unable to appoint a full panel to an International Cableski Competition, it may appoint a National Official.

Federations are solely responsible for the examination of National Officials. As a recommendation a 3rd Class Cableski Judge should be required in his practical exam to achieve at least:

- 10 passes of 20 seconds of 1000 points in Tricks even with falls. Each pass with two or more errors should be counted as a failure. Judgements of whether or not a trick is valid or is not valid, even if the Jury disagrees, are not considered errors.

Appendix 1. Trick values

Note: for better readability the table is split in 2 parts: Water Turns and Air Turns.

		Water Turns					
		Trick		2 Skis		1 Ski	
Description		No.	Bas.Code	Bas	Rev	Bas	Rev
Side Slide	Group A (Basic Tricks)	1	S	20	20	40	40
180º FB		3	B	30	30	60	60
180º BF		4	F	30	30	60	60
360º FF		5	O	40	40	90	90
360º BB			BB	40	40	90	90
540º FB			5B	50		110	
540º BF			5F	50		110	
720º FF			7F	60		130	
720º BB			7B	60		130	
900º FB							
900º BF							
Stepover 180º FB	Group B (Stepover Tricks) Part 1	6	LB	70	70	110	
Stepover 180º BF		7	LF	70	70	110	
Stepover 360º FF							
Stepover 360º BB							
Stepover 540º FB							
Double Stepover 540º FB							
Stepover 720º FF							
Stepover 900º FB							
Stepover 540º BF							
Double Stepover 540º BF							
Stepover 720º BB							
Stepover 900º BF							
Toehold Side Slide	Group C (Toehold)	2	TS			100	180
Toehold 180º FB		8	TB			150	200
Toehold 180º BF		9	TF			150	200
Toehold 360º FF		10	TO			250	350
Toehold 360º BB		11	TBB			250	300
Toehold 540º FB		12	T5B			400	430
Toehold 720º FF			T7F			550	
Toehold 540º BF		13	T5F			500	
Toehold 720º BB							
Toehold Stepover 180º FB							
Toehold Stepover 180º BF							
Toehold Stepover 360º FF							
Toehold Stepover 360º BB							
Toehold Stepover 540º FB							
Toehold Stepover 540º BF							

		Air Turns					
		Trick		2 Skis		1 Ski	
Description		No.	Bas.Code	Bas	Rev	Bas	Rev
Side Slide							
180º FB	Group F (Basic Air)	14	WB	60	60	80	80
180º BF		15	WF	60	60	80	80
360º FF		16	WO	150	150	200	250
360º BB		17	WBB	150	150	200	250
540º FB		18	W5B	310	310	400	470
540º BF		19	W5F	310	310	400	470
720º FF		20	W7F	800	800	950	950
720º BB		21	W7B	480	480	700	770
900º FB		22	W9B	850	850	1100	1100
900º BF			W9F	850	850	1200	1200
Stepover 180º FB	Group B (Stepover Tricks) Part 2	23	WLB	130	130	180	
Stepover 180º BF		24	WLF	130	130	180	
Stepover 360º FF		25	WLO	220	220	280	280
Stepover 360º BB		26	WLBB	220	220	300	300
Stepover 540º FB		27	WL5B	330	330	480	500
Double Stepover 540º FB			WL5LB			600	650
Stepover 720º FF			WL7F	700	700	900	950
Stepover 900º FB			WL9B	800	800	1000	1100
Stepover 540º BF		28	WL5F	300	300	500	530
Double Stepover 540º BF			WL5LF			700	750
Stepover 720º BB			WL7B	550	550	800	850
Stepover 900º BF			WL9F	800	800	1000	1100
Toehold Side Slide							
Toehold 180º FB	Group G (Toehold Air)	29	TWB			200	250
Toehold 180º BF		30	TWF			200	250
Toehold 360º FF		31	TWO			300	380
Toehold 360º BB		32	TWBB			330	400
Toehold 540º FB		33	TW5B			600	660
Toehold 720º FF		34	TW5F			700	
Toehold 540º BF		35	TW7F			750	750
Toehold 720º BB		36	TW7B			780	
Toehold Stepover 180º FB		37	TWLB			400	
Toehold Stepover 180º BF		38	TWLF			500	
Toehold Stepover 360º FF		39	TWLO			580	580
Toehold Stepover 360º BB		40	TWLBB			560	600
Toehold Stepover 540º FB		41	TWL5B			800	850
Toehold Stepover 540º BF		42	TWL5F			900	
Front Flip	Group D (Flips)	43	WFLIPF	800		800	
Back Flip		44	WFLIPB	500	500	500	500
Double Back Flip		45	WDFLIPB	1000		1000	
Back Flip Full Twist FF		46	WFLIPBFF	800		800	
Back Flip Full Twist BB		47	WFLIPBBB	800		800	
Back Flip Half Twist FB		48	WFLIPBFB	750	750	750	750
Back Flip Half Twist BF		58	WFLIPBBF			550	550
Back Flip Line Back		49	WFLIPBLB	900		950	
Flip 5F		59	WFLIPB5F			1100	1200
Flip 5B		60	WFLIPB5B			1000	1050
Ski Line 180º FB	Group E (Ski Lines)	50	SLB			450	480
Ski Line 180º BF		51	SLF			500	550
Ski Line 360º FF		52	SLO			550	550
Ski Line 360º BB		53	SLBB			550	600
Ski Line 540º FB		54	SL5B			700	730
Ski Line 540º BF		55	SL5F			730	780
Ski Line 720º BB		56	SL7B			950	1050
Ski Line 720º FF		57	SL7F			1000	1100

Appendix 2. General Diagrams

Diagram 1: Measuring the height

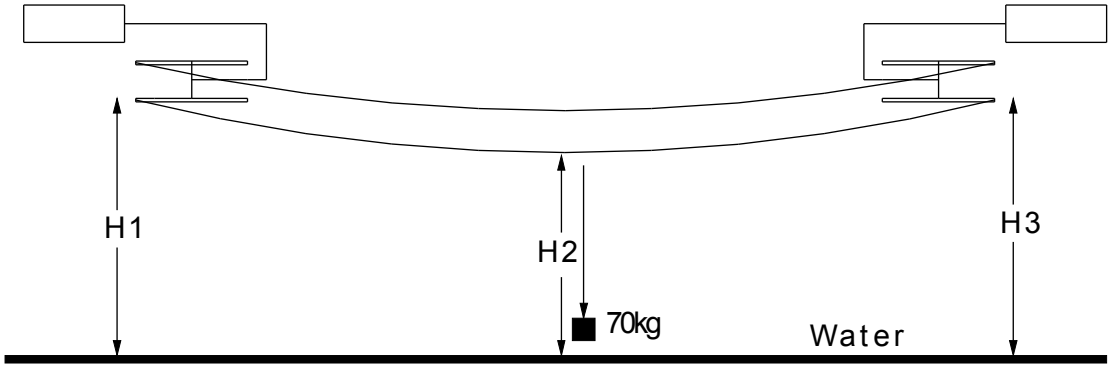

Diagram 2: Calculation of AB

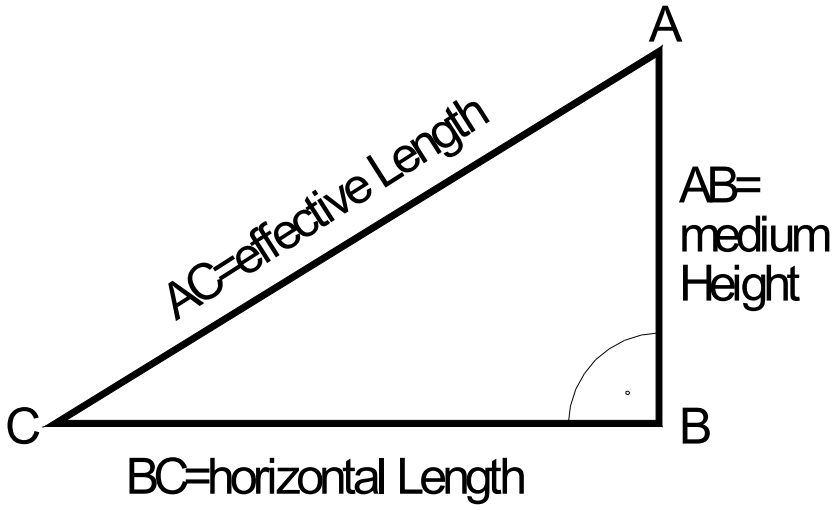

Diagram 3: Handle dimensions in Slalom and Jump

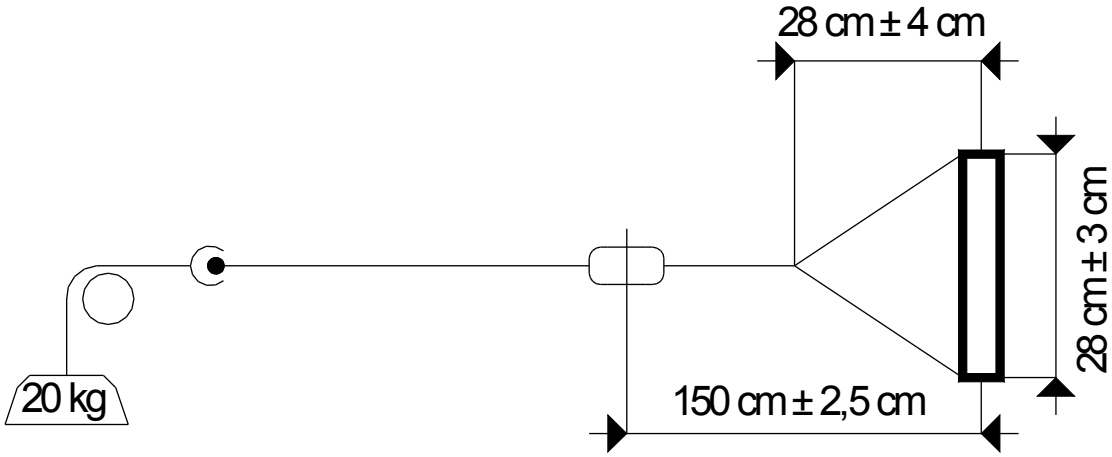

Diagram 4: Tow lines made with Spectra ropes

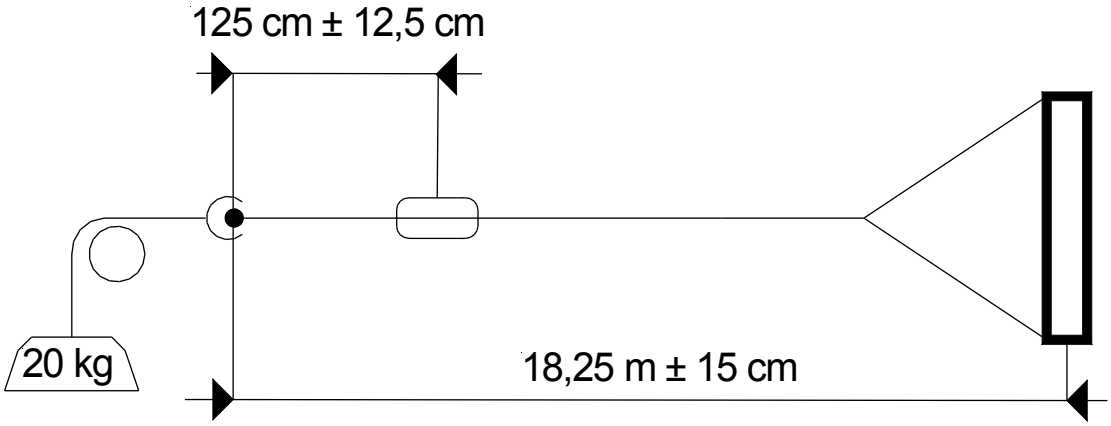

Appendix 4. Jump diagrams

Diagram 5: Jump Course

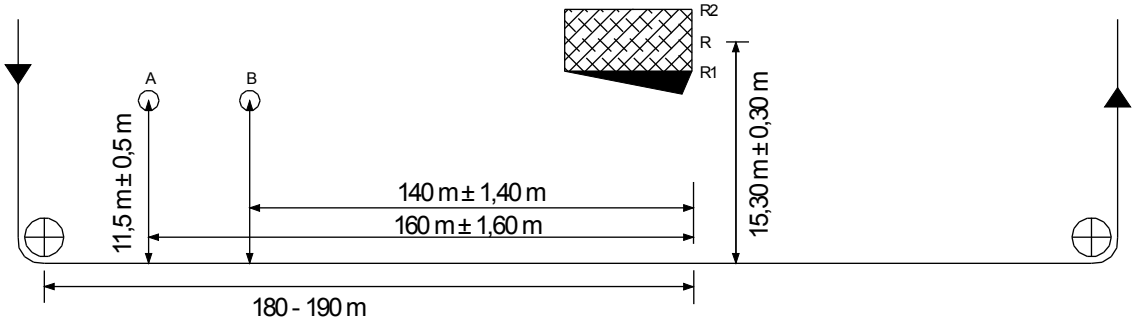

Diagram 6: Ramp Angle

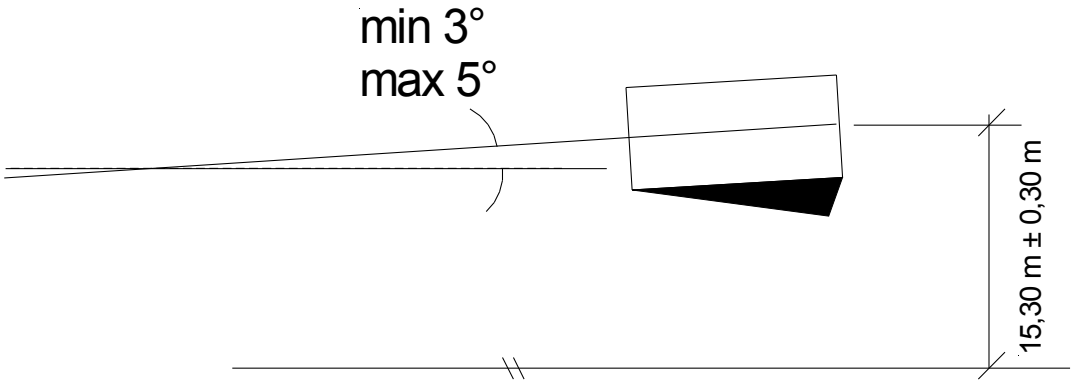

The ramp must be parallel to the main running cable with a tolerance of 3º to 5º open. Open means that the high end of the ramp is turned away from the main running cable.
The recommended angle for RC homologated competitions is 4º to 5º.

Diagram 7: Ramp setting chart

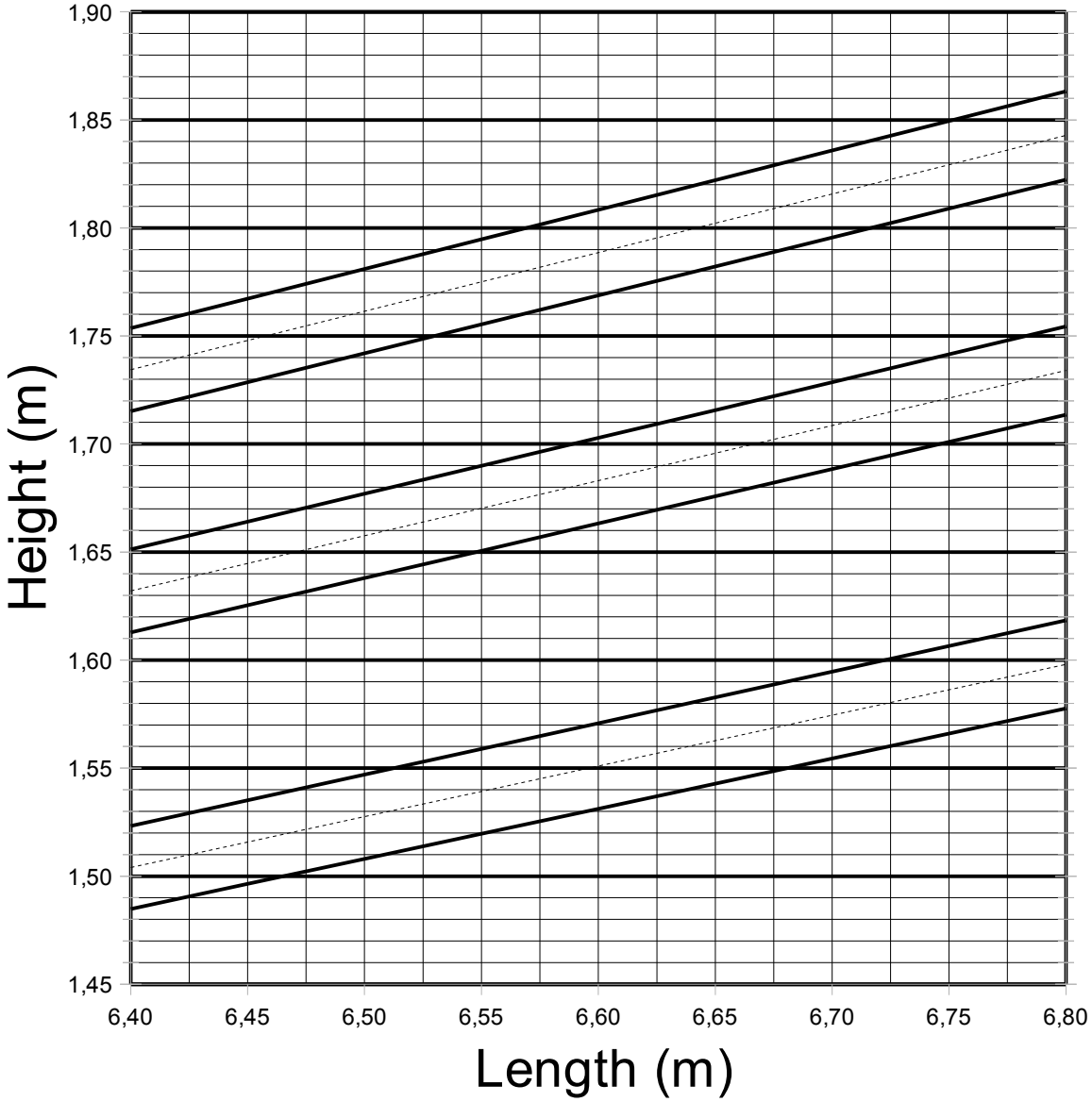

Instructions: For any particular ramp setting, a combination of HEIGHT at the top edge and LENGTH out of the water enclosed within the solid line is allowable. A combination that lies on the dotted line is the most desirable.

Appendix 5. Slalom diagrams

Diagram 8: Slalom Course

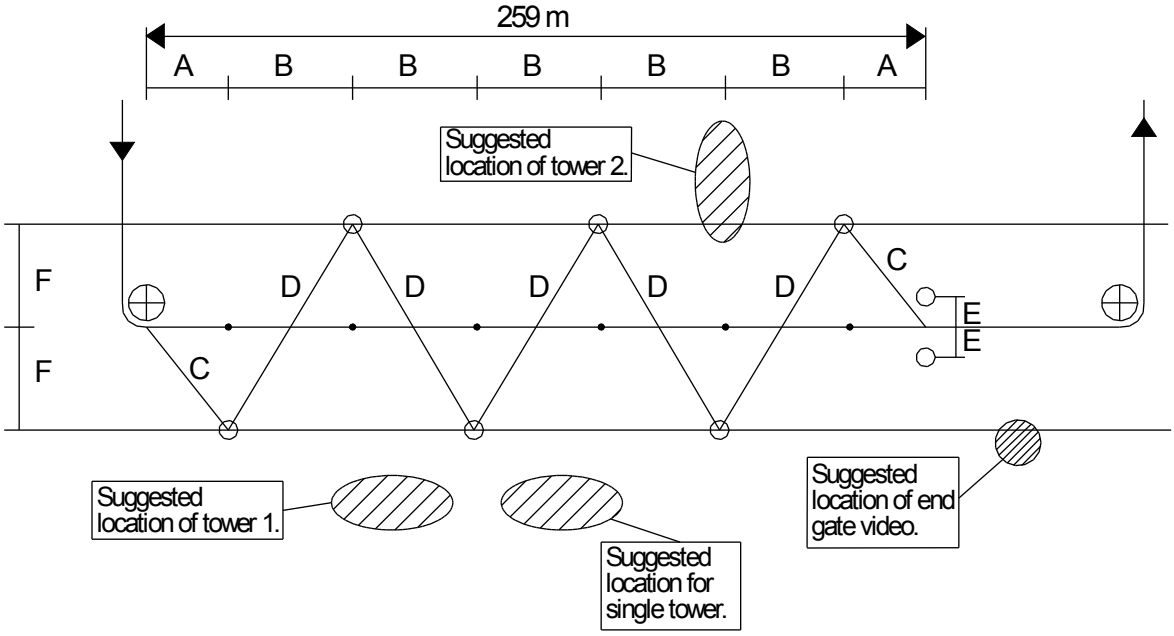

Overall	=	259 m	± 1/4 %	258,353 m -	259,648 m
A	=	27 m	± 1/2 %	26,865 m -	27,135 m
B	=	41 m	± 1/2 %	40,795 m -	41,205 m
C	=	29,347 m	± 1/2 %	29,200 m -	29,494 m
D	=	47,011 m	± 1/2 %	46,776 m -	47,246 m
E	=	1,25 m	± 5 %	1,188 m -	1,313 m
F	=	11,5 m	± 1 %	11,385 m -	11,615 m

axis = main running cable
(off line) axis - middle line buoys = 0,00 m ± 0,30 m
Note: The average of the six measured F dimensions cannot be less than 11,48 m

Diagram 9: Scoring of buoys

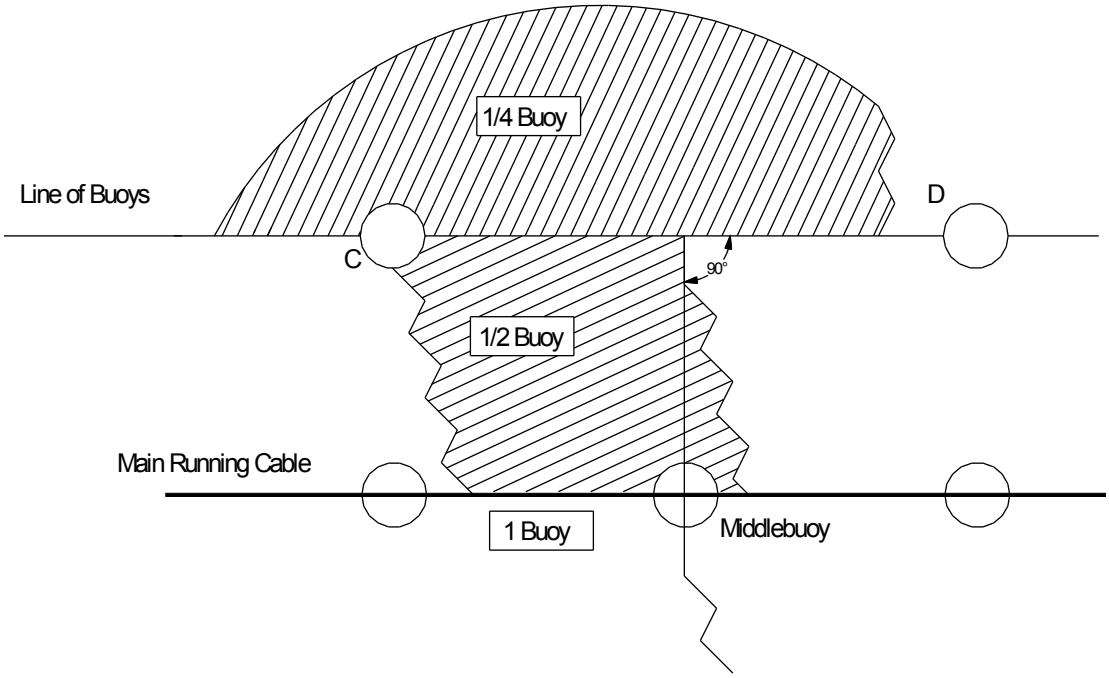

Appendix 6. Trick diagrams

Diagram 10: Trick Course

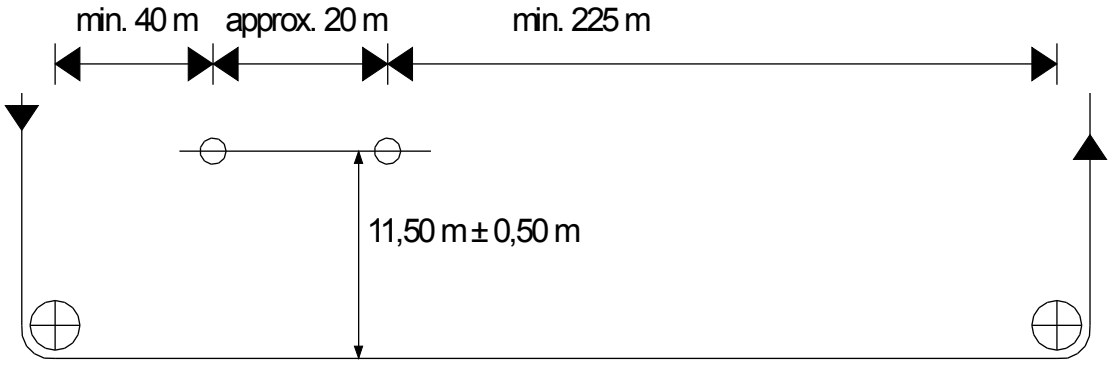

Note: The trick buoys can be on either side of the cable.

Confederation E&A Cableski Additional Rules

Rule 1. General

Rule 1.1. Applicability of these rules

The rules set forth here govern cableski competitions sanctioned by the Confederation E&A of the IWWF. The IWWF Cableski Technical Rules shall apply to all cableski competitions except for administrative matters and except where otherwise stated below or elsewhere in the Additional Rules. Where the worlds „World“ or „IWWF“ appear these are to be read as „Confederation E&A“. Where the words „Confederation“ or „Confederations“ appear these are to be read as „Federation“ or „Federations“. However, the organizers of homologated competitions in Confederation E&A, other than those of titled competitions where specific Additional Rules apply, may make variations from these rules that do not affect the actual conduct of the events of a competition nor affect the actual recorded scores of the competitors. Examples of acceptable variations are those of administrative matters, entry requirements, method of draw, number of events or rounds, numbers in finals, slalom start speeds, method of determining event placements and/or overall placements. The Confederation E&A Cableski Council shall be the arbiter as to whether variations are acceptable as being within the intentions of the rules or not.

Rule 1.2. Amendments to the rules

The Confederation E&A Cableski Council may make amendments to these rules at any time and decide on which date these will become effective.

Rule 2. Confederation E&A (European) Cableski Championships

Rule 2.1. Confederation E&A Cableski Championships Dates

The Confederation E&A Cableski Championships will be held biannually in the odd years

Rule 2.2. Confederation E&A Cableski Championships entry

Each federation in the Confederation E&A shall have the right to select a team of skiers to represent their federation in the Confederation E&A Cableski Championships.

Rule 2.3. Team Selection

Each team shall consist of a maximum of 6 qualified skiers, with the further limitation that no team may have more than 4 men or 4 women.
Each federation shall furthermore have the right to nominate two reserve skiers to its team, to replace any injured skier, provided the maximum number of 4 men or 4 women is not exceeded.
Each federation shall be entitled to a team of two competitors, male or female, whether qualified or not. Such a skier who is qualified in only one event or not qualified in any event may compete in only two events.
The federation organizing the Confederation E&A Cableski Championships shall be entitled to a full team of 6 competitors, whether qualified or not.

Rule 2.4. Qualification

The following minima have to be achieved at a homologated cableski competition:

	Men	**Women**
First Class Skier	6@58/18.25 3.000 pts. 32 m	6@52/18.25 2.200 pts 25 m
Second Class Skier	6@55/18.25 2.000 pts 27 m	6@49/18.25 1.500 pts 20 m

	Men	Women
Specialist	6@58/14.25 3.500 pts 40 m	6@55/16.00 2.500 pts 30 m

A skier being first class in at least two events may participate in those events. To participate in the third event he has to be at least second class in that event. If a skier is a „specialist“ in one event, he may participate in that event without having to qualify for the other events.

Rule 2.5. Non-team skiers

Skiers not selected for their national team may qualify to compete in the Confederation E&A Cableski Championships as individuals if they meet one or more of the following criteria:

a) Confederation E&A Cableski Record Holder. The skier must have performed the record at least 45 days before the first days of familiarization of the Confederation E&A Cableski Championships and have his performance ratified by the Confederation E&A Cableski Council at least 15 days before the first day of familiarization of the Confederation E&A Cableski Championships.
b) Reigning Confederation E&A Cableski Champion in that event (Slalom, Tricks or/and Jump) in which they defend their title.
c) Ranked on one IWWF Confederation E&A Cableski Ranking List of the last 2 previous years in the top 5% men or women in any event excluding overall. The numbers will be rounded to the nearest full digit.

All skiers qualified as individuals must be entered by their federation

Rule 2.6. Entry form and documentation

As evidence of the qualifications of the skiers, federations are to enter the full details on the Entry Forms, including the date and place of the competition(s) in which the required minima were achieved.
Federations are held responsible for the accuracy of the documents, which shall be sent within the stipulated time with the skiers Entry Forms to both the President of the Confederation E&A Cableski Council and the Organizer.
Skiers shall have their Performance Booklets with them.
The Tournament Performance Booklets may be used for Cableski, provided that the Chief Judge who signs the booklet indicates that the performance has been during a Cableski Competition.
The checking of skiers' eligibility and qualifications will be done under the responsibility of the Chief Judge before the draw takes place.

Rule 2.7. Officials

The Bureau of Confederation E&A shall appoint the following officials after receiving proposals from the Confederation E&A Cableski Council:

- 1 Chief Judge
- 1 Assistant Chief Judge
- 6 Judges
- 1 Homologator
- 1 Chief Calculator
- 1 Assistant Calculator
- 1 Chief Technical Officer
- 1 Technical Officer

Rule 2.8. Event Judges

The Event Judges for each event shall be chosen by the Chief Judge from among the Appointed Judges. As fas as possible the Event Judges shall be from different Federations.

Rule 3. Confederation E&A (European) Cableski Juniors Championships

Rule 3.1. Confederation E&A Cableski Juniors Championships Dates

The Confederation E&A Cableski Juniors Championships will be held on a yearly basis.

Rule 3.2. Categories

Skiers belonging to the age categories Juniors under 15 and Juniors under 19 as laid down in the Cableski Technical Rules are eligible for this Championships.
Juniors under 15 may compete as Juniors under 19, on the condition that they produce an authorization signed by their parents.
A skier is not allowed to compete in both Junior categories.

Rule 3.3. Team Selection

Each team for the Confederation E&A Cableski Juniors under 15 Championships shall consist of a maximum of 6 qualified skiers, with the further limitation that no team may have more then 4 boys or 4 girls.
Each team for the Confederation E&A Cableski Juniors under 19 Championships shall consist of a maximum of 6 qualified skiers, with the further limitation that no team may have more then 4 boys or 4 girls.
Each federation shall furthermore have the right to nominate two reserve skiers to each of its teams, to replace an injured skier, provided the maximum of 4 boys or 4 girls is not exceeded.
Each federation with no qualified skier for a team in the Confederation E&A Cableski Juniors under 15 Championships shall be entitled to enter one skier in the Confederation E&A Cableski Juniors under 15 Championships. Each federation with no qualified skier for a team in the Confederation E&A Cableski Juniors under 19 Championships shall be entitled to enter one skier in the Confederation E&A Cableski Juniors under 19 Championships. Such a skier may compete in all three events.
The federation organizing the Confederation E&A Cableski Juniors Championships shall be entitled to a full team of 6 skiers for the Confederation E&A Cableski Juniors under 15 Championships and a full team of 6 skiers for the Confederation E&A Cableski Juniors under 19 Championships, whether qualified or not.

Rule 3.4. Qualification

The following minima have to be achieved at a homologated cableski competition:

	Boys	Girls
Juniors under 15	6@46/18.25 1.300 pts 16 m	6@43/18.25 1.000 pts 12 m
Juniors under 19	6@52/18.25 2.300 pts 22 m	6@49/18.25 2.000 pts 16 m

A skier must have reached two of these minima in order to ski in all 3 events.

Rule 3.5. Officials

The Bureau of Confederation E&A shall appoint the following officials after receiving proposals from the Confederation E&A Cableski Council:

- 1 Chief Judge
- 1 Assistant Chief Judge
- 6 Judges
- 1 Homologator
- 1 Chief Calculator
- 1 Assistant Calculator
- 1 Chief Technical Officer
- 1 Technical Officer

Rule 4. Confederation E&A (European) Cableski Senior Championships

Rule 4.1. Confederation E&A Cableski Senior Championships Dates

The Confederation E&A Cableski Senior Championships will be held on a yearly basis together with

the Confederation E&A Cableski Juniors Championships.

Rule 4.2. Categories

Skiers belonging to the age categories Seniors I, Seniors II or Seniors III as laid down in the Cableski Technical Rules are eligible for this Championships.
All skiers participating in the E&A Cableski Senior Championships will be put together in one age category and will ski with the rules of the Senior I age category as laid down in the Cableski Technical Rules.

Rule 4.3. Team Selection

Each team for the Confederation E&A Cableski Seniors Championships shall consist of a maximum of 5 skiers, with the further limitation that no team may have more then 4 men or 4 women.
Each federation shall furthermore have the right to nominate two reserve skiers to its team, to replace an injured skier, provided the maximum of 4 men or 4 women is not exceeded.

Rule 4.4. Officials

The Officials assigned to the Confederation E&A Cableski Youth Championships shall be the Officials for the Confederation E&A Cableski Senior Championships.

Rule 5. European Cableski Tour (ECT)

Rule 5.1. General

The European Cableski Tour (ECT) is a co-ordinated series of competitions with a final placement and Cash Prizes, based on the results of all competitions.
The competitions which are part of the ECT and the amount of prizes will be announced by the Confederation E&A Cableski Council before April 1st of the coming season.
A sanction fee of 800 EUR is charged to the organizers of the individual stops.
There shall be a prize giving ceremony at each stop.

Rule 5.2. Point System

At each competition of the ECT points will be awarded according to the Final placement in Slalom, Trick and Jump, for Men and Women in that competition.
The top Men skiers in each event will receive points as follows:

1st place	10 points
2nd place	9 points
3rd place	8 points
...	...
9th place	2 points
10th place	1 point

The top five Women skiers in each event will receive points as follows:

1st place	5 points
2nd place	4 points
3rd place	3 points
4th place	2 points
5th place	1 point

If a tie exists, all tied skiers will receive the points of the first tying places.

Rule 5.3. European Cableski Tour Placement

All skiers taking part in at least 2 stops of the ECT shall be listed in the final placement.

Places in the ECT Overall Placement shall be determined by adding each skiers points of all events in all ECT stops. Places in the ECT Event Placement shall be determined by adding each skiers points of one event in all ECT stops.
If there is a tie for the final placement, the tie will be resolved according to the higher points received, by adding the points received in the three events during one stop. If this does not resolve the tie, the tie shall be broken by the sum of the total overall points scored in the ECT.

Rule 5.4. Prizes

The prizes will be given in Euro (EUR).
The cash prizes will be given proportionally and based on the income from the number of stops.
If there are 5 stops organized the cash prizes will be given as follows:

Overall placement	Men	Women
1st place	840	640
2nd place	640	440
3rd place	360	200
4th place	240	120
5th place	120	40
Individual placement	**Men**	**Women**
1st place	80	40

Rule 5.5. Entry

Minimum entry qualifications will be the second class minima as set for the Confederation E&A Cableski Championships, unless otherwise authorized by the Confederation E&A Cableski Council.

Rule 6. Medals

Rule 6.1. General

The following medals will be distributed under the responsibility of the President of the Confederation E&A.

Confederation E&A Cableski Championships	Gold	Silver	Bronze
Men	1 x Slalom 1 x Tricks 1 x Jump 1 x Overall	1 x Slalom 1 x Tricks 1 x Jump 1 x Overall	1 x Slalom 1 x Tricks 1 x Jump 1 x Overall
Women	1 x Slalom 1 x Tricks 1 x Jump 1 x Overall	1 x Slalom 1 x Tricks 1 x Jump 1 x Overall	1 x Slalom 1 x Tricks 1 x Jump 1 x Overall
Team	6 x Team + 1 boxed	6 x Team + 1 boxed	6 x Team + 1 boxed
Chief Judge	1		
Assistant Chief Judge	1		
Judges	6		
Homologator	1		
Chief Calculator	1		
Assistant Calculator	1		
Chief Technical Officer	1		
Technical Officer	1		

Confederation E&A Cableski Championships	**Gold**	**Silver**	**Bronze**
Organizer	Max. 5		

The same number of medals shall be distributed for the Confederation E&A Cableski Juniors under 15 Championships, the Confederation E&A Cableski Juniors under 19 Championships and the Confederation E&A Seniors Championships, with the exception that for the Senior Teams there shall be a number of 5 Medals (Gold, Silver and Bronze) + 1 boxed and that there is only one jury panel for all three Championships combined.

Rule 6.2. Restrictions regarding Award of Medals

At each of the Confederation E&A Championships the award of medals will be restricted as follows:

1 or 2 competitors in an event	No medals
3 competitors in an event	Gold medal only
4 or 5 competitors in an event	Gold and Silver medals only
6 or more competitors	Gold, Silver and Bronze medals.

Rule 7. International Calendar Cableski Competitions

Rule 7.1. General

An International Calendar Cableski Competition is a competition open to skiers from more than one National Federation and entered on the Confederation E&A Calendar by the organizing Federation by using the International Application Form for Cableski.
The following types of competitions must be entered on the Confederation E&A Calendar:

- Competitions containing in their title the words “Europe”, “European” or “Confederation E&A”.
- Competitions open to skiers from more than one National Federation and containing in their title the words “Championship(s)”, “Criterium”, “Masters”, “Classic” or other words deemed by the Confederation E&A Cableski Council to imply a high level competition.
- Cash Prize Competitions (for details see Confederation E&A Bye-Laws).

Other types of competitions open to skiers from more than one National Federation may be entered on the Confederation E&A Calendar if so wished by the organizing Federation.
If any rules of the competition vary from the relevant IWWF Cableski Technical Rules or Confederation E&A Cableski Additional Rules details must be given at the time of application for entry on the International Calendar and the Confederation E&A Cableski Council may refuse the application if it does not approve the variation(s).
The Organizers must comply with the provisions of any relevant Bye-Law or List of Obligations. Should the Organizers wish to vary any of the provisions, the agreement of the Administrative Committee of the Confederation E&A must be obtained at the time of application for entry on the International Calendar.
The Confederation E&A Cableski Council has the right to send an appointed person to inspect the proposed sit of any Titled International Calendar Competition. In this case the Organizer shall pay the costs involved.

Rule 7.2. Entry

No skier my enter an International Calendar Cableski Competition without the permission of his National Federation.

Rule 7.3. Homologation

The events at International Calendar Cableski Competitions may be homologated at Normal, Ranking List or World Record Capability level. If it is the intention to seek World Record Capability Homologation this must be notified at the time of application for entry on the International Calendar and the competition will then be marked „RC“ and the Confederation E&A Cableski Council may send an observer at the cost of the organizing Federation.

Rule 7.4. Officials

The Confederation E&A Cableski Council will appoint the Officials (Judges, Homologators, Calculators and Technical Officials). The number and qualifications of Officials of each category of competition will be decided by the Cableski Council in accordance with Rule 15.2 of the IWWF Cableski Technical Rules.
The organizing Federation may inform the Confederation E&A Cableski Council of the names of the Officials they would prefer to be appointed but this is not binding for the Confederation E&A Cableski Council.
Should the organizing Federation specifically invite an individual official and the Confederation E&A Cableski Council agrees to the appointment, the Organizers shall be responsible for the traveling expenses of the Official unless otherwise agreed by the Official.
In the case of Cash Prize competitions the Organizers shall pay the traveling expenses of all Appointed Officials as defined in the Confederation E&A Bye-Laws.
In cases where the Organizers are not liable to pay the travel expenses of the Appointed Officials they shall be liable to pay the excess above APEX fare if they have not sent the Officials the necessary information at least 60 days before the start of familiarization and the Officials have been unable to obtain APEX fares.
The Organizer shall be responsible for the cost of full board and lodging of the Appointed Officials and for their transport in both directions between airport / railway station and hotel, and also between hotel and site. Board and lodging means from the night before an Official's duties begin to and including the night of the last competition day. Any further hospitality offered by the Organizer shall apply to all Appointed Officials.

Rule 7.5. Requirements to the Organizer

The Organizers must provide:

- A Chief Organizer.
- A qualified Safety Officer and adequate rescue, first aid and medical services.
- A Press Officer and adequate facilities for journalists and TV personnel if applicable.
- Personnel to fill ancillary positions as secretaries, jetty marshals, rescue personnel, video operators, timers, etc. A list of names must be handed to the Chief Judge who is responsible for the selection and allocation of ancillary positions.
- All courses, installations and equipment required by the IWWF Cableski Technical Rules and needed for the efficient running of the competition, including radios and other communication and timing equipment. These must be ready for checking prior to the arrival of the Homologator.
- Adequate facilities for ski-storage, catering, jury and other meetings.
- Adequate transports between accommodation and site.
- If required an assistant for the Homologator.

This list is not intended as a complete checklist, but as an indication of the minimum requirements for an International Calendar Cableski Competition.

Rule 7.6. Results

At all International Calendar Cableski Competitions the Organizers shall provide copies of signed results for distribution. At titled competitions copies of the results shall be provided as specified in the List of Obligations.

Rule 8. International Non-Calendar Cableski Competitions

Rule 8.1. General

An International Non-Calendar Cableski Competition is a competition open to skiers of more than one National Federation that:

- Does not have to be entered on the Confederation E&A Calendar by virtue of Rule 7.1 of the International Calendar Cableski Competitions.
- Has been refused entry on the Confederation E&A Calendar by virtue of non-compliance with any of the other provisions of the rules for International Calendar Cableski Competitions.

The organizing Federation is solely responsible for the regulations, entry minima and organization of the competition.

Rule 8.2. Homologation

The events at an International Non-Calendar Cableski Competition may not be homologated at Ranking List or World Record Capability level.

Rule 8.3. Officials

The organizing Federation is entirely responsible for the appointment of officials and for negotiating with them the extent of reimbursement, if any, of their traveling and board and lodging expenses.

Rule 9. National Cableski Competitions

Rule 9.1. General

A National Cableski Competition is a competition open only to skiers who are members of the organizing Federation or and affiliated club of that Federation.
If the Organizers of a competition announced as a National Cableski Competition accept an entry from a skier who is not a member as specified above, the skiers Federation must be shown on the results and the Confederation E&A Cableski Council will re-classify the competition as a Non-Calendar International Cableski Competition and the according rules will apply.
The organizing Federation may specify any further requirements for entry or restrictions on entry that it wishes.
The organizing Federation is responsible for the regulations, entry minima and organization of the competition.

Rule 9.2. Homologation

The events at a National Cableski Competition may be homologated at Normal, Ranking List or World Record Capability level. If it is the intention to seek World Record Capability Homologation this must be notified to the Confederation E&A Cableski Council at least two months before the competition, listing the names of the Jury. The Confederation E&A Cableski Council may then decide to send an observer. The organizing Federation must pay the travel and full board and lodging costs of this observer.
If the competition is reclassified as an International Non-Calender Cableski Competition, the homologation level is limited to Normal or Ranking List.

Rule 9.3. Officials

The organizing Federation is entirely responsible for the appointment of officials and for negotiating with them the extend of reimbursement, if any, of their traveling and board and lodging expenses.

Rule 10. Homologation

Rule 10.1. Dossiers

The requirements in the E&A Homologation Dossier shall be considered to be Additional Rules and apply to all levels of homologation.
The Homologation Dossier and any Record Dossier must be sent to the Confederation E&A Cableski Council within 2 weeks of the end of the competition. If the Homologation Dossier is received after the 7th November the competition will not be listed as homologated in the current year.

Rule 10.2. Normal Homologation

At Normal homologated competitions the maximum scores which may be included in the E&A Cableski Ranking List and for the purpose of entry qualification and seeding to the draw are:

	Men	Women
Slalom	6@58/13	6@55/14.25
Tricks	5000 pts	3800 pts
Jump	40 m	30 m

Rule 11. E&A Ranking Lists

Rule 11.1. General

The E&A Ranking Lists are prepared from the performances of E&A skiers of the published results of qualifying events.
From World Record or Ranking List Homologated Competitions all performances will be included. From Normal Homologated Competitions scores will be limited to the maximums defined as per Rule 10.2.

Rule 11.2. Events

E&A Ranking Lists will be published for Slalom, Tricks, Jump and Overall.

Rule 11.3. Categories

E&A Ranking Lists will be prepared for Men and Women in the following categories:

- Open
- Juniors under 15
- Juniors under 19
- Seniors

In order to be included into the Open Ranking List the following minimum results have to be achieved:

	Men	Women
Slalom	0,25@58/18.25	0,25@52/18.25
Tricks	2000 pts	1500 pts
Jump	27 m	20 m

Rule 12. Performance Booklets

Rule 12.1. Purpose

The purpose of entries in Performance Booklets is to enable the Chief Judge to

a) Decide whether or not a skier has achieved the minimum entry qualifications for a competition.
b) Place the skier in the correct seeding group for the draw for starting order.

Rule 12.2. General

The skier's name and other information on the sheet in the Performance Booklet must be written in capital letters.
The sheets must be signed by either the Chief Judge or the Chief Calculator (under the authority of the Chief Judge) whose signature must be followed by the name in capital letters.

Rule 12.3. Validity

Recorded performances are valid only:

- If performed in the current calendar year and the previous calendar year.
- If performed at homologated events of competitions in E&A or events of competitions in other Confederations considered by the Confederation E&A Cableski Council to be of at least Normal Homologation.
- Up to a maximum score as defined for Normal Homologation as per Rule 10.2.

In the case where the homologation of an event at a competition is subsequently rejected by the Confederation E&A Cableski Council the performance is only valid prior to the date of the rejection even if the published results are not altered.
In the case where a claimed Record is subsequently not ratified the performance is only valid prior to the date of rejection even if the published results are not altered. The E&A Cableski Council will decide, after considering the reason for the rejection, whether or not the performances of the other skiers in the even remain valid.
For Slalom only performances where the previous pass was complete shall be entered.

Rule 13. Records

Rule 13.1. General

The Confederation E&A Cableski Council will consider only performances at Record Homologation competitions in Confederation E&A for ratification.
The provisions of the IWWF Cableski Technical Rules: Rule 14 Records shall also apply to Confederation E&A Records.

Rule 13.2. Categories

Records will be recognized for the Men and Women divisions in the categories of Open, Juniors under 15, Juniors under 19 and Seniors.
For the age categories (Juniors and Seniors) only records obtained at the E&A Cableski Championships of these age categories will be considered for ratification.

Rule 14. Rules for Cableski Officials

Rule 14.1. Officials Cards

Officials Cards are issued by the Confederation E&A Cableski Council and are valid for the duration of the season in which they are issued.
During one of the first meetings of the year, the Confederation E&A Cableski Council will renew, on the proposal of the Chairman of the Confederation E&A Cableski Council the cards of the Cableski Official on the condition that the official:

- has been sufficiently active during the season.
- has not made too many errors during a competition.
- has shown ability to make proper interpretation of the rules.
- has not shown himself to be lacking impartiality.
- has not refused, without good reason, to accept to do what was required of him by the Chief Judge of the competition at which he was present.

In order to be taken into consideration a negative report c, d, e, and g must be sent within two weeks of the competition to the Chairman of the Confederation E&A Cableski Council. This report should be drawn up by a member of the Confederation E&A Cableski Council or by the Chief Judge of the competition in question. The Confederation E&A Cableski Council will after due deliberation, decide whether the circumstances compel the removal of the Cableski Official from the list of Cableski Officials in the interests of the sport. The Cableski Official shall be advised of the withdrawal of his card in a personal letter from the Confederation E&A Cableski Council.
A Cableski International Homologator who is also a Tournament Homologator, is not required to have homologated a Cableski Competition, but must fulfil the conditions necessary for the renewal of his Tournament Homologation Card.
A 1st Class Cableski Judge will then automatically become a 2nd Class Cableski Judge. He may if he so wishes, present himself for examination for re-qualification as a 1st Class Cableski Judge, after having served satisfactorily at two International Cableski Competitions in his capacity as 2nd Class Cableski Judge.

Rule 14.2. Participation in Competitions

On receipt of the Cableski Calender, Cableski Officials shall inform the Confederation E&A Cableski Council of the Cableski Competition for which:

- they are able to participate
- they wish to participate

On the basis of these replies the Confederation E&A Cableski Council will then appoint Cableski Officials to the Cableski Competitions.
A roster for all international competitions on the calendar will be completed by the Confederation E&A Cableski Council and supplied to all Confederation E&A Cableski Officials and to the Organizing Federations.
A Cableski Official failing to be present or to arrive in time before the start of the competition, without acceptable reason, will be penalized; the first time with a warning, and if he does so again he will not permitted to function during the next season.
If a Cableski Official wishes to be replaced, for some reason, at a competition for which he was nominated, he must inform, at least 4 weeks before the date of the competition, for which he wishes to be replaced, the Confederation E&A Cableski Council and the Organizers of the competition, so

that they are able to provide someone else as a substitute.

Rule 15. Rules for International Cableski Homologators

Rule 15.1. Homologation Dossier

The Homologation Dossier of the competition, together with the Chief Judge's report an all the necessary documents shall be sent within two weeks of the end of the competition to the Confederation E&A Cableski Council.
In case of a delayed mailing of the Homologation Dossier to the Confederation E&A Cableski Council, the Homologator:

1) will receive, after the initial delay, a warning
2) after any further delay, the Confederation E&A Cableski Council will at once withdraw his Card from the Homologator.

Rule 16. Rules for National Officials

Rule 16.1. Responsibility

National Officials, such as 3rd Class Cableski Judges, National Cableski Calculators, National Cableski Homologators and National Technical Officers, are responsible to and under the responsibility of their National Federation.

Rule 16.2. Rights

When appointed to an International Calendar Competition, a National Official is entitled to such rights and reimbursements of expenses as are specified in the Bye-Laws, Obligations and Additional Rules.

Rule 16.3. Functions

All National Officials are qualified to function at Normal Homologated competitions.

Rule 16.4. Appointment to Panels

A National Cableski Official may be appointed to the panel of a National or International Non-Calendar Competition by his Federation. In the case where the Confederation E&A Cableski Council is unable to appoint a full panel to an International Calendar Competition, it may appoint a National Cableski Official.

Rule 16.5. Examinations

Federations are solely responsible for the examination of National Officials.

Rule 16.6. List of National Cableski Officials

Each Federation shall send a list of its National Officials to the Confederation E&A Cableski Council before the 1st March every year and update the list during the season. Only Cableski Officials appearing on the list will be considered by the Confederation E&A Cableski Council as qualified National Cableski Officials.

Rule 17. Officials Seminar for Judges, Calculators, Technical Officers and Homologators

Rule 17.1. Responsibility and Purpose

The Confederation E&A Cableski Council is responsible for organising an annual Officials Seminar.
The purpose of this seminar is to provide Cableski Judges, Cableski Homologators, Technical Officials and Cableski Homologators with:

- further education in judging and scoring,
- information on the latest rule changes and their interpretation,
- practical trick writing, judging and scoring,
- a trick writing and scoring evaluation.

Rule 17.2. Attendance

1st Class Cableski Judges, International Cableski Calculators, and International Cableski Homologators are expected to take part in the Officials Seminar at least once every 3 years.
Any 1st Class Cableski Judge who wishes to officiate at any World, Confederation or European titled event or Cash Prize 1 competition is required to have attended one seminar within the previous 3 years.[9]
2nd Class Cableski Judges are welcome to attend, but if they upgrade to 1st Class Cableski Judges within three years of their attendance, this would NOT be counted for qualification for major events.

Rule 17.3. Date and Venue

Federations wishing to host the seminar should apply in writing to the Confederation E&A Cableski Council who will, as far as possible, announce dates and venues at least two years in advance of each seminar.
The venue should move around in the Confederation, offering an equal chance to officials from all countries to attend. This will be taken into account when allocating seminar venues.
The date should be in spring or autumn of any year.

Rule 17.4. Costs

Each individual attending the seminar is responsible for his own costs of travel and accommodation. Confederation E&A will provide the meeting rooms and lecture facilities.

Rule 18. Harry de Laat Memorial Trophy

Rule 18.1. Purpose

To remember Harry de Laat an annual challenge cup shall be presented.

Rule 18.2. Consignee

The Harry de Laat Memorial Trophy shall be rewarded to the best (based on overall score) participating skier in the Juniors under 15 category of the Confederation E&A Junior Championships.

Rule 18.3. Presentation

The trophy shall be presented to the skier at the price giving ceremony of the Confederation E&A Junior Championships and with the engraving at the annual Confederation E&A congress to the skier or the representative of his federation. The federation of the skier shall be responsible to bring the trophy to the next Confederation E&A Junior Championships.

Rule 18.4. Duration

The trophy is limited to run for 12 years. As the first trophy was presented in 2007, this rule shall be removed after 2018. After that time the trophy shall be presented to the IWWF Hall of Fame.

[9] In order to qualify as „attended“, an official must attend the majority of sessions during the seminar.

Rule 19. Homologator's Checklist

No.	Task	Complete
1	Survey all buoys and the jump for the slalom, jump, and trick courses and adjust as necessary to meet the tolerances of Diagram 5, Diagram 8, Diagram 10. The tolerances in terms of centimeters are displayed on Emmanuel Lion's cable ski survey program. Homologators must take care to measure the lower cable of the wheels at the exact point the cable is tangential to the pulley axis.	
2	Measure height of the lower cable above the water at the towers each end and in the middle under 70 kgs load as shown in Diagram 1.	
3	From the homologation computer program, provide the technical official with speed times.	
4	Measure and adjust the lines from the ball furthest from the handle to the middle of the handle according to Diagram 3 and Diagram 4.Lines must be pre-stretched. Do no accept lines longer then the nominal length, because the tolerance may be exceeded when stretched during the tournament.	
5	Measure the jump at all heights to be used according to Rule 11.4. and enter the dimensions on the electronic dossier.	
6	Check the colours and sizes of the buoys according to Rule 12.4.	
7	Inspect the speed indication system and check the times by stopwatch.	
8	Check the judges positions for trick and slalom and end gate video if used. Rule 12.9. , Rule 12.10. , Diagram 8.	
9	Check the operation and timing of the semi automatic trick timing device or video trick timing device.	
10	Install and survey all buoys and camera positions, if required, to be used for jump measurement. Either Boettcher or Corson systems are acceptable but in either case there must be a check buoy separate from the calibration buoys, installed and surveyed. Care should be taken that buoy anchor lines are sufficiently tight to prevent movement of the buoys from their surveyed position by the effect of wind or wash.	
11	Confirm that there are sufficient radios for all officials and arrangement for re-charging.	
12	Confirm the officials or assistants responsible for video recording trick and slalom (if end gate video used), that the equipment is operating, spare batteries are available and the officials or assistants are trained and understand their duties.	
13	Confirm officials or assistants responsible for timing slalom and jump, their training, viewpoint stopwatches and communication are adequate. Rule 9.3. and Rule 9.4.	
14	Complete with own and Chief Judge's signatures the “Homologation Notice” from the survey program, then print and display for competitor's information.	
15	During trick events be prepared to measure trick ski dimensions, Rule 8.2.	
16	Complete the electronic dossier in the Emmanuel Lion survey program.	

17	Collect the video jump results electronic files when complete.	
18	Collect the completed results from the calculator in all available electronic formats.	
19	Email all result files, the homolgation file, and jump results files to Joost de Leijer <j.leyer@planet.nl>	
20	Retain for 1 year any paper start lists, surveys and electronic files for reference in case of an query.	